NOVA FLORIDA

fondital
BE INNOVATIVE

NOVA FLORIDA

Nova Florida is a Fondital brand, Fondital is the first manufacturer of die-cast aluminium radiators worldwide as well as the international leader in heating systems. This is the result of the focus on sustainable innovation in R&D, production renewal related to study of the products, the constant development and training of human resources and the attention to well-being of its employees.

Fondital establishes with its clients strategic partnerships that go beyond a simple supplier-client relationship, but are based on information sharing and customer orientation, maintaining focus on environmental sustainability.

VISION

We want to be an innovative company in the production of efficient and sustainable products, creating strong partnerships with our stakeholders, enhancing our local roots to be a global reference.

MISSION

Our mission is to produce heating systems and structural castings for the automotive sector, manufacturing high-quality products using the latest industrial technologies. We are committed to operating efficiently, minimising our energy consumption and promoting sustainable processes that respect the environment. We also want to be a centre of expertise and added value for the territory in which we operate.

FONDITAL WORLDWIDE

Fondital is market leader internationally. Multilingual staff and representation offices assure a constant presence on the global market, as evidence of its customer oriented vision.

Fondital is constantly growing, thanks to its ability to interpret customer needs and changes, and to the ability to constantly adapt its supply to the new end market needs with process and product innovations.

● Active markets

CONTENTS

HOT WATER STORAGE TANKS PAGE 155

FLUE FITTINGS AND ACCESSORIES PAGE 165

FONDITAL AND BIM:
INNOVATION IN PROJECT DESIGN

The entire catalogue of radiators and boilers has been added to BIMobject, the world's largest platform of BIM content.
Therefore, you can download the product files and insert them into the desired project by directly accessing all the specific and detailed information for each prototype.

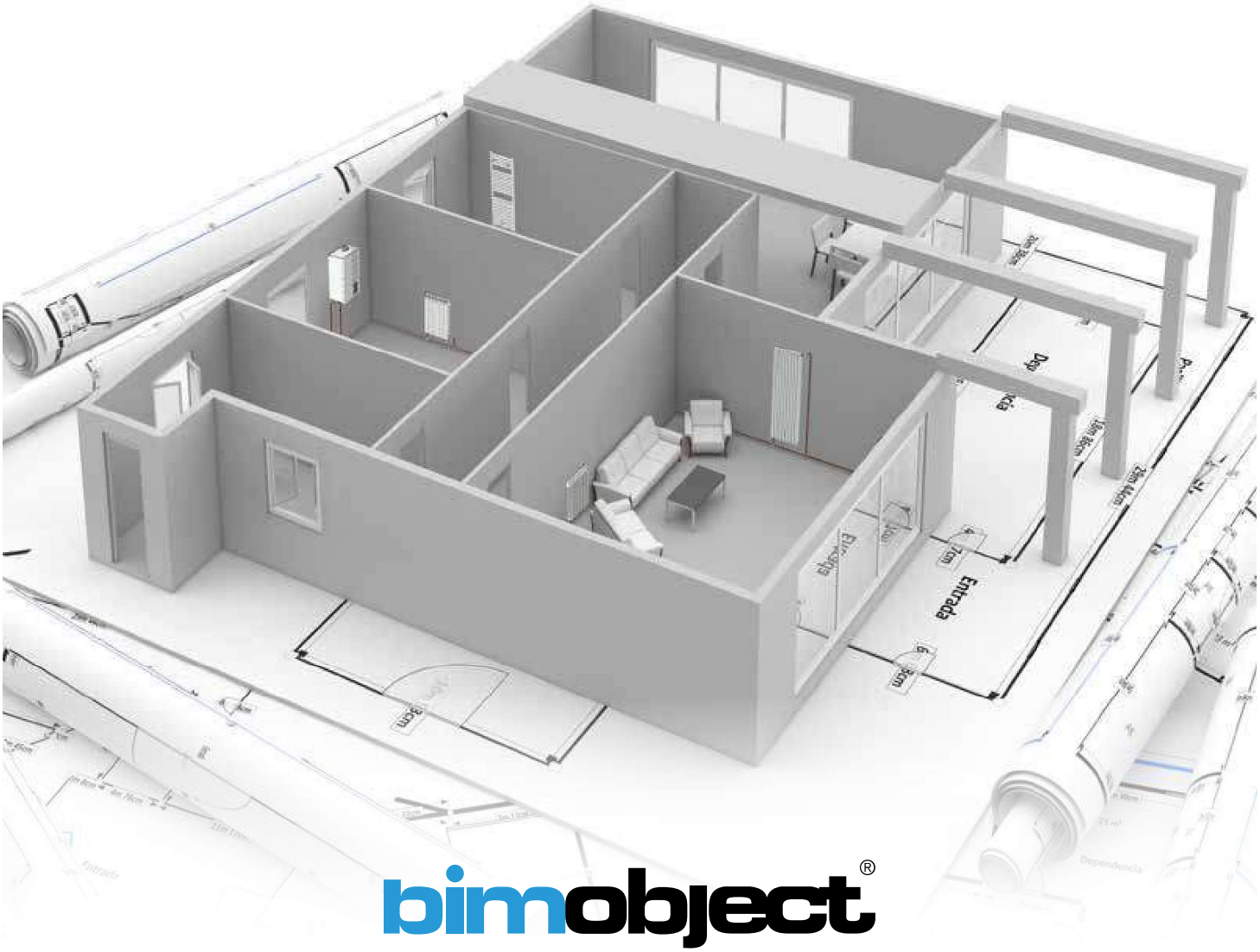

bimobject®

Download the Fondital products from www.bimobject.com/en/fondital

BOILERS

CODE OF THE PRODUCT

KC KRB KB KR KBS KRBS CTN

EXAMPLE

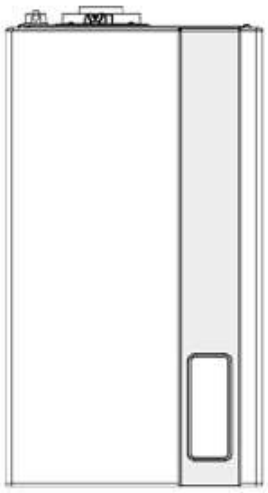

ORION KC

WALL-HUNG CONDENSING BOILER WITH INSTANT PRODUCTION OF DHW

K = CONDENSING

C = COMBI BOILER WITH INSTANT DHW PRODUCTION

KEY

K CONDENSING

C COMBI BOILER WITH INSTANT DHW PRODUCTION

B INTEGRATED HOT WATER STORAGE TANK

R CH ONLY

AF BI-THERMAL HEAT EXCHANGER

RB CH ONLY PLUS 3-WAY VALVE FOR HOT WATER STORAGE TANK

AF BI-THERMAL HEAT EXCHANGER

RB CH ONLY PLUS 3-WAY VALVE FOR HOT WATER STORAGE TANK

S WITH HYDRAULIC UNIT AND ELECTRONICS FOR MANAGING A SOLAR THERMAL PLANT

TN NATURAL DRAUGHT

TFS FORCED DRAUGHT

IN BUILT-IN INSTALLATION

MODEL	CONDENSING	OPEN CHAMBER STANDARD BOILER	BOILER BODY	CENTRAL HEATING	INSTANTANEOUS DHW PRODUCTION	INTEGRATED STORAGE TANK	REMOTE STORAGE TANK	SOLAR EASY	WALL-HUNG	FLOOR STANDING	CASCADE-TYPE INSTALLATION	< 35 KW	> 35 KW
ORION KC	●				●			●	●			●	
ORION KR	●			●			●	●	●			●	
ORION KRB	●			●			●	●	●			●	
ORION KB	●					●		●	●			●	
VIRGO KC	●				●			●	●			●	
VIRGO KR	●			●			●	●	●			●	
VIRGO KRB	●			●			●	●	●			●	
DELFIS KC	●				●			●	●			●	
DELFIS KR	●			●			●	●	●			●	
DELFIS KRB	●			●			●	●	●			●	
LEO KC	●				●				●			●	
PHOENIX KRB	●					●				●		●	
PEGASUS SOLAR KRBS	●					●		●		●		●	
PEGASUS SOLAR COMPACT KBS	●					●		●		●		●	

MODEL	CONDENSING	OPEN CHAMBER STANDARD BOILER	BOILER BODY	CENTRAL HEATING	INSTANTANEOUS DHW PRODUCTION	INTEGRATED STORAGE TANK	REMOTE STORAGE TANK	SOLAR EASY	WALL-HUNG	FLOOR STANDING	CASCADE-TYPE INSTALLATION	< 35 KW	> 35 KW
ORION CTFS					●			●	●			●	
ORION RBTFS				●			●	●	●			●	
ORION RTFS				●			●	●	●			●	
VIRGO CTFS					●			●	●			●	
VIRGO CTN		●			●			●	●			●	
VIRGO RBTFS				●			●	●	●			●	
VIRGO RBTN				●			●	●	●			●	
VIRGO RTFS				●			●	●	●			●	
VIRGO RTN		●		●			●	●	●			●	
DELFIS CTN AF		●			●				●			●	
DELFIS CTFS AF					●				●			●	
DELFIS CTN		●			●				●			●	
DELFIS RBTN				●			●		●			●	
DELFIS CTFS					●				●			●	
DELFIS RTFS				●			●	●	●			●	
DELFIS RBTFS				●			●	●	●			●	
DELFIS CTFS 40					●			●	●				●
DELFIS RTFS 40				●			●		●				●
DELFIS RBTFS 40				●			●		●				●
VEGA CTFS					●			●	●			●	
NIBIR CTFS (CU)					●				●			●	
NIBIR CTFS					●				●			●	
ALTAIR RTN E		●		●			●			●		●	●
ALTAIR RTN PVE		●		●			●			●		●	●
ALTAIR RTN T		●		●			●			●		●	●
ALTAIR RTFS E				●			●			●		●	
DRAGO DUAL			●	●			●			●	●	●	●

SYMBOLS

CONDENSING
Condensing boiler

STANDARD
Standard boiler

OUTDOOR INSTALLATION
Boiler that can be installed outdoors, in a partially protected place

INDOOR INSTALLATION
Indoor wall-hung boiler

BUILT-IN INSTALLATION
Boiler to be installed in a suitable flush-mounting unit

floor standing INSTALLATION
Indoor floor standing boiler

CASCADE-TYPE INSTALLATION
Boiler that can be installed in cascade-type connection

PLATE EXCHANGER
Plate DHW exchanger

26-PLATE HEAT EXCHANGER
26-plate DHW heat exchanger

ALUMINIUM PRIMARY EXCHANGER
Aluminium primary exchanger

STAINLESS STEEL PRIMARY EXCHANGER
Stainless steel heat exchanger

Primary copper heat exchanger
Primary copper heat exchanger

OUTDOOR DHW hot water storage tank
Boiler preset for connection to a remote hot water storage tank

INTEGRATED DHW hot water storage tank 45 -130 - 170 - 300 litres
Boiler with hot water storage tank

MODULATION RATIO 1:9
Modulation range of heat output in CH and DHW modes

MODULATION RATIO 1:10
Modulation range of heat output in CH up to 1:10

SOLAR EASY
Boiler that can be combined with natural or forced circulation solar systems

EASY TO CONTROL
Multilingual menu with detailed access to parameters

FREEZE PROTECTION
Boiler self-protection system

REDUCED SIZE
Reduced overall dimensions

ELECTRONIC IGNITION
Boiler equipped with electronic flame ignition board

LOW NOx
Low NOx emission boiler - class 6

ENERGETIC SAVING
Product with high energy efficiency

TOP COMFORT DHW***
High-performance boiler for DHW

FRONT DOOR FOR ACCESS
Front access for easy maintenance

COMFORT FUNCTION
Control for activating DHW comfort function

MODULATING PUMP
High efficiency modulating pump to optimize energy consumption and performance

MADE IN ITALY
Manufactured in Italy

CONDENSING BOILERS

WALL-HUNG BOILERS <35KW

FLOOR STANDING BOILERS <35KW

TECHNICAL SPECIFICATIONS OF CONDENSING BOILERS

ORION KC

CONDENSING WALL-HUNG BOILER WITH INSTANTANEOUS PRODUCTION OF DHW
CAN BE MATCHED TO OUTDOOR INSTALLATION KIT

Available in the following models:

12 24 28 32

- **Modulation ratio: 1:9**
- **Condensation also in DHW operation thanks to the thermally insulated 26-plate DHW heat exchanger**
- **Management of one heating zone with ambient temperature probe and two zones with zone kit**
- **Double filling system: automatic and manual**
- **High domestic hot water production, more power during DHW operation (18 - 28 - 30 - 35 kW)**
- **High-efficiency modulating circulation pump with built-in air purging device**
- Controls to manage two different types of solar thermal systems fitted as standard
- Thermosetting polymer-covered stainless steel heat exchanger
- Heating expansion vessel - 10 litres
- Thermoregulation with external probe (optional)
- Sanitary comfort function: ★★★
- Automatic by-pass

TOUCH SCREEN INTERFACE

- *Modulation thermostat with ambient probe*
- *Day/night temperature level selection*
- *Weekly programming*
- *Timer and ambient temperature setting*
- *DHW "comfort" function enabling: ★★★*

Model	Gas type	Code	Heat input		L x H x D	Gross weight
			Nominal (Qn) kW	Nominal DHW kW	mm	kg
KC 12	NATURAL GAS	COTXX2KC12	12,0	18,0	420x750x315	35,5
	PROPANE	COTXX6KC12				
KC 24	NATURAL GAS	COTXX2KC24	23,7	27,3	420x750x315	38,0
	PROPANE	COTXX6KC24				
KC 28	NATURAL GAS	COTXX2KC28	26,4	30,4	420x750x315	39,0
	PROPANE	COTXX6KC28				
KC 32	NATURAL GAS	COTXX2KC32	30,4	34,5	420x750x315	40,5
	PROPANE	COTXX6KC32				

DIMENSIONS AND CONNECTION CENTRE DISTANCES

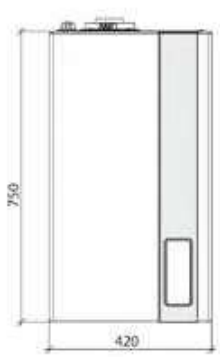

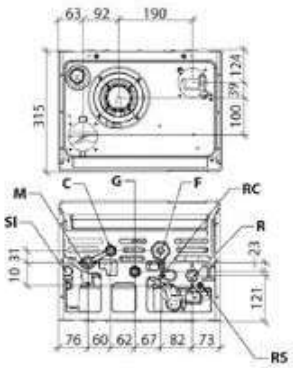

SI	Condensate drain	**F**	Cold water inlet (1/2")
M	CH system flow (3/4")	**RC**	Filler tap
C	DHW outlet (1\2")	**R**	CH system return (3/4")
G	Gas inlet (1/2")	**RS**	Discharge tap

Technical specifications	um	KC 12	KC 24	KC 28	KC 32
Nominal heat input (Qn)	kW	12,0	23,7	26,4	30,4
Nominal heat output (80-60°C) (Pn)	kW	11,7	23,0	25,5	29,4
Heat output (50-30°C)	kW	12,6	25,0	28,0	32,3
Reduced heat input (Qr)	kW	2,0	3,0	3,3	4,2
Useful efficiency at nominal input (80-60°C)	%	97,1	96,8	96,7	96,8
Useful efficiency at nominal input (50-30°C)	%	105,1	105,6	106,0	106,2
Useful efficiency at 30% (30°C return)	%	106,0	107,4	107,4	108,3
Heating expansion vessel capacity	l	10	10	10	10
DHW nominal heat input	kW	18,0	27,3	30,4	34,5
Specific DHW flow ΔT=30K	l/min	8,8	13,4	15,5	16,2
NOx emission class	-	6	6	6	6
Electric protection rating	IP	IPX5D	IPX5D	IPX5D	IPX5D

(**) with comfort function disabled.
For other technical specifications, see from page 44 - Maximum length of flue gas venting, see page 166

Item	Description	Code
	Coaxial kit Ø 60/100 length 75cm	0CONDASP00
	Remote control, ErP V class (118x85x32 mm)	0CREMOTO04
	Coaxial fitting kit Ø60/100	0KITATCO00
	Splitter kit Ø80+80	0KITSDOP00
	Electrical kit for zone management with external probe	0KITZONE05

Item	Description	Code
	External probe (60x45x31 mm)	0SONDAES01
	Kit for connection to solar plant	0KITSOLC07
	Tap kit with filter KC-KRB-CT-RBT	0KITRUBI05
	Magnetic dirt separator filter	0AFILDEF00

For other accessories, see from page 165

ORION KR

WALL-HUNG CONDENSING BOILER CH ONLY
CONNECTION TO AN EXTERNAL HOT WATER STORAGE TANK (OPTIONAL) WITH EXTERNAL 3-WAY VALVE (OPTIONAL)

- **Modulation ratio: 1:9**
- **Multifunction relay for connection to systems with zone valves or to solar plant or to remote alarm signal**
- **Management of one heating zone with ambient temperature probe and two zones with zone kit**
- **Standard management of one type of solar thermal system**
- **External hot water storage tank heating setting (optional)**
- **High-efficiency modulating circulation pump with built-in air purging device**
- Thermosetting polymer-covered stainless steel heat exchanger
- Heating expansion vessel - 10 litres
- Thermoregulation with external probe (optional)
- Automatic by-pass

TOUCH SCREEN INTERFACE

- *Modulation thermostat with ambient probe*
- *Day/night temperature level selection*
- *Weekly programming*
- *Timer and ambient temperature setting*
- *Heater DHW "comfort" function enabling*

Available in the following models:

12 24 28 32

Model	Gas type	Code	Heat input		L x H x D	Gross weight
			Nominal (Qn) kW	Nominal DHW kW	mm	kg
KR 12	NATURAL GAS	COTXX2KR12	12,0	18,0 (*)	420x750x315	34,0
	PROPANE	COTXX6KR12				
KR 24	NATURAL GAS	COTXX2KR24	23,7	27,3 (*)	420x750x315	35,5
	PROPANE	COTXX6KR24				
KR 28	NATURAL GAS	COTXX2KR28	26,4	30,4 (*)	420x750x315	37,0
	PROPANE	COTXX6KR28				
KR 32	NATURAL GAS	COTXX2KR32	30,4	34,5 (*)	420x750x315	38,5
	PROPANE	COTXX6KR32				

(*) with optional external water tank for DHW.

DIMENSIONS AND CONNECTION CENTRE DISTANCES

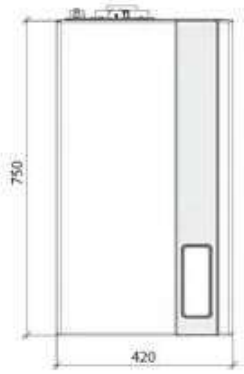

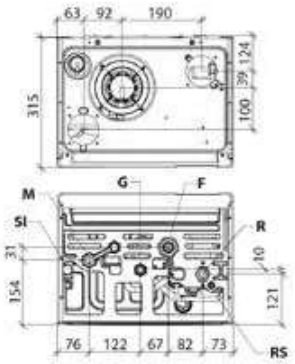

SI	Condensate drain	**F**	Cold water inlet (1/2")
M	CH system flow (3/4")	**R**	CH system return (3/4")
G	Gas inlet (1/2")	**RS**	Discharge tap

Technical specifications	um	KR 12	KR 24	KR 28	KR 32
Nominal heat input (Qn)	kW	12,0	23,7	26,4	30,4
Nominal heat output (80-60°C) (Pn)	kW	11,7	23,0	25,5	29,4
Heat output (50-30°C)	kW	12,6	25,0	28,0	32,3
Reduced heat input (Qr)	kW	2,0	3,0	3,3	4,2
Useful efficiency at nominal input (80-60°C)	%	97,1	96,8	96,7	96,8
Useful efficiency at nominal input (50-30°C)	%	105,1	105,6	106,0	106,2
Useful efficiency at 30% (30°C return)	%	106,0	107,4	107,4	108,3
Heating expansion vessel capacity	l	10	10	10	10
DHW nominal heat input	kW	18,0 (*)	27,3 (*)	30,4 (*)	34,5 (*)
NOx emission class	-	6	6	6	6
Electric protection rating	IP	IPX5D	IPX5D	IPX5D	IPX5D

(*) with optional hot water storage tank.
For other technical specifications, see from page 45 - Maximum length of flue gas venting, see page 166

Item	Description	Code
	Coaxial kit Ø 60/100 length 75cm	0CONDASP00
	Remote control, ErP V class (118x85x32 mm)	0CREMOTO04
	Coaxial fitting kit Ø60/100	0KITATCO00
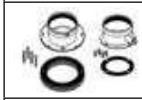	Splitter kit Ø80+80	0KITSDOP00
	hot water storage tank temperature probe 3m	0KITSOND00

Item	Description	Code
	Electrical kit for zone management with external probe	0KITZONE05
	External probe (60x45x31 mm)	0SONDAES01
	Tap kit with filter KR-KB-RT	0KITRUBI04
	Magnetic dirt separator filter	0AFILDEF00

For other accessories, see from page 165

ORION KRB

WALL-HUNG CONDENSING BOILER, CH ONLY, WITH INTEGRATED 3-WAY VALVE CONNECTION TO AN EXTERNAL HOT WATER STORAGE TANK (OPTIONAL)

Available in the following models:

12 24 28 32

- **Temperature probe for water tank supplied as standard**
- **Modulation ratio: 1:9**
- **Multifunction relay for connection to systems with zone valves or to solar plant or to remote alarm signal**
- **Management of one heating zone with ambient temperature probe and two zones with zone kit**
- **Standard management of one type of solar thermal system**
- **Integrated 3-way deviating valve**
- **High-efficiency modulating circulation pump with built-in air purging device**
- Thermosetting polymer-covered stainless steel heat exchanger
- Thermoregulation with external probe (optional)
- Heating expansion vessel - 10 litres
- Anti-legionella function for hot water storage tank
- Automatic by-pass
- External hot water storage tank heating setting (optional)

TOUCH SCREEN INTERFACE

- *Modulation thermostat with ambient probe*
- *Day/night temperature level selection*
- *Weekly programming*
- *Timer and ambient temperature setting*
- *Heater DHW "comfort" function enabling*

Model	Gas type	Code	Heat input		Energy efficiency class	L x H x D	Gross weight
			Nominal (Qn) kW	Nominal DHW kW	Room heating	mm	kg
KRB 12	NATURAL GAS	COTXX2KU12	12,0	18,0 (*)	A	420x750x315	36,5
	PROPANE	COTXX6KU12					
KRB 24	NATURAL GAS	COTXX2KU24	23,7	27,3 (*)	A	420x750x315	37,0
	PROPANE	COTXX6KU24					
KRB 28	NATURAL GAS	COTXX2KU28	26,4	30,4 (*)	A	420x750x315	38,5
	PROPANE	COTXX6KU28					
KRB 32	NATURAL GAS	COTXX2KU32	30,4	34,5 (*)	A	420x750x315	40,0
	PROPANE	COTXX6KU32					

(*) with optional hot water storage tank.

DIMENSIONS AND CONNECTION CENTRE DISTANCES

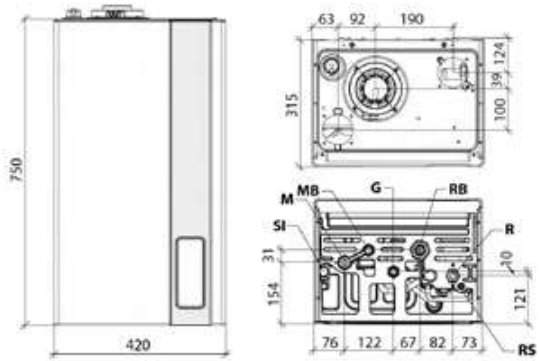

SI	Condensate drain		
M	CH system flow (3/4")	**RB**	Return from hot water storage tank (1/2")
MB	Flow for hot water storage tank (1/2")	**R**	CH system return (3/4")
G	Gas inlet (1/2")	**RS**	Discharge tap

Technical specifications	um	KRB 12	KRB 24	KRB 28	KRB 32
Nominal heat input (Qn)	kW	12,0	23,7	26,4	30,4
Nominal heat output (80-60°C) (Pn)	kW	11,7	23,0	25,5	29,4
Heat output (50-30°C)	kW	12,6	25,0	28,0	32,3
Reduced heat input (Qr)	kW	2,0	3,0	3,3	4,2
Useful efficiency at nominal input (80-60°C)	%	97,1	96,8	96,7	96,8
Useful efficiency at nominal input (50-30°C)	%	105,1	105,6	106,0	106,2
Useful efficiency at 30% (30°C return)	%	106,0	107,4	107,4	108,3
Heating expansion vessel capacity	l	10	10	10	10
DHW nominal heat input	kW	18,0 (*)	27,3 (*)	30,4 (*)	34,5 (*)
NOx emission class	-	6	6	6	6
Electric protection rating	IP	IPX5D	IPX5D	IPX5D	IPX5D

(*) with optional hot water storage tank.
For other technical specifications, see from page 46 - Maximum length of flue gas venting, see page 166

Item	Description	Code
	Coaxial kit Ø 60/100 length 75cm	0CONDASP00
	Remote control, ErP V class (118x85x32 mm)	0CREMOTO04
	Coaxial fitting kit Ø60/100	0KITATCO00
	Splitter kit Ø80+80	0KITSDOP00
	Electrical kit for zone management with external probe	0KITZONE05
	External probe (60x45x31 mm)	0SONDAES01

Item	Description	Code
	Tap kit with filter KC-KRB-CT-RBT	0KITRUBI05
	Magnetic dirt separator filter	0AFILDEF00

For other accessories, see from page 165

Accessories supplied as standard

Item	Description
	hot water storage tank temperature probe 3m

ORION KB

WALL-HUNG CONDENSING BOILER WITH AN INTEGRATED WATER TANK FOR THE PRODUCTION OF DHW

- **Modulation ratio: 1:9**
- **Thermally-insulated 45-litre stainless steel hot water storage tank**
- **hot water storage tank heating setting**
- **Management of one heating zone with ambient temperature probe and two zones with zone kit**
- **Multifunction relay for connection to systems with zone valves or to solar plant or to remote alarm signal**
- Thermosetting polymer-covered stainless steel heat exchanger
- Heating expansion vessel - 10 litres
- Thermoregulation with external probe (optional)
- Anti-legionella function for hot water storage tank
- Prearranged for connection to a recirculation system
- 3-speed circulation pump with built-in air purging device
- Automatic by-pass

Available in the following models:

24 32

TOUCH SCREEN INTERFACE

- *Modulation thermostat with ambient probe*
- *Day/night temperature level selection*
- *Weekly programming*
- *Timer and ambient temperature setting*
- *Heater DHW "comfort" function enabling*

Model	Gas type	Code	Heat input		L x H x D	Gross weight
			Nominal (Qn) kW	Nominal DHW kW	mm	kg
KB 24	NATURAL GAS	COTXX2KB24	23,7	27,3	580x861x412	74,0
	PROPANE	COTXX6KB24				
KB 32	NATURAL GAS	COTXX2KB32	30,4	34,5	580x861x412	79,0
	PROPANE	COTXX6KB32				

DIMENSIONS AND CONNECTION CENTRE DISTANCES

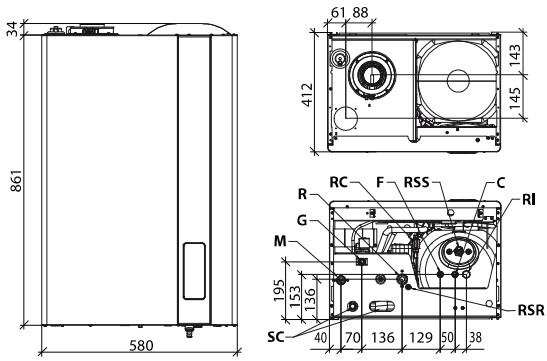

M	CH system flow (3/4")	**RSS**	DHW drain cock
G	Gas inlet (1/2")	**C**	DHW outlet (1\2")
R	CH system return (3/4")	**RI**	Recirculation inlet (1/2")
RC	Filler tap	**RSR**	CH discharge tap
F	Cold water inlet (1/2")	**SC**	Condensate drain and safety valves

Technical specifications	um	KB 24	KB 32
Nominal heat input (Qn)	kW	23,7	30,4
Nominal heat output (80-60°C) (Pn)	kW	23,0	29,4
Heat output (50-30°C)	kW	25,0	32,3
Reduced heat input (Qr)	kW	3,0	4,2
Useful efficiency at nominal input (80-60°C)	%	96,8	96,2
Useful efficiency at nominal input (50-30°C)	%	105,6	106,2
Useful efficiency at 30% (30°C return)	%	107,4	108,3
Heating expansion vessel capacity	l	10	10
DHW nominal heat input	kW	27,3	34,5
Specific DHW flow ΔT=30K	l/min	16,2	19,5
NOx emission class	-	6	6
Electric protection rating	IP	IPX4D	IPX4D

For other technical specifications, see from page 47 - Maximum length of flue gas venting, see page 166

Item	Description	Code
	Coaxial kit Ø 60/100 length 75cm	0CONDASP00
	Remote control, ErP V class (118x85x32 mm)	0CREMOTO04
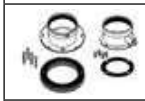	Splitter kit Ø80+80	0KITSDOP00
	Electrical kit for zone management with external probe	0KITZONE05
	External probe (60x45x31 mm)	0SONDAES01

Item	Description	Code
	Recirculation kit	0KRICIRC02
	Tap kit with filter KR-KB-RT	0KITRUBI04
	Magnetic dirt separator filter	0AFILDEF00

For other accessories, see from page 165

VIRGO KC

CONDENSING WALL-HUNG BOILER WITH INSTANTANEOUS PRODUCTION OF DHW

- **Modulation ratio: 1:9**
- **Multifunction relay for connection to systems with zone valves or to solar plant or to remote alarm signal**
- **Controls to manage two different types of solar thermal systems fitted as standard**
- **High domestic hot water production, more power during DHW operation (18 - 28 - 30 - 35 kW)**
- **Stainless steel 26-plate DHW heat exchanger**
- **Heating expansion vessel - 10 litres**
- Thermosetting polymer-covered stainless steel heat exchanger
- Freeze protection function for heating and hot water storage tank
- Thermoregulation with external probe (optional)
- 3-speed circulation pump with built-in air purging device
- Automatic by-pass

TOUCH SCREEN INTERFACE

- *DHW and heating temperature setting*
- *Operating mode setting*
- *Solar thermal systems status display*

Available in the following models:

12 24 28 32

Model	Gas type	Code	Heat input		L x H x D	Gross weight
			Nominal (Qn) kW	Nominal DHW kW	mm	kg
KC 12	NATURAL GAS	CVOXX2KC12	12,0	18,0	420x750x315	36,5
	PROPANE	CVOXX6KC12				
KC 24	NATURAL GAS	CVOXX2KC24	23,7	27,3	420x750x315	37,5
	PROPANE	CVOXX6KC24				
KC 28	NATURAL GAS	CVOXX2KC28	26,4	30,4	420x750x315	39,0
	PROPANE	CVOXX6KC28				
KC 32	NATURAL GAS	CVOXX2KC32	30,4	34,5	420x750x315	40,5
	PROPANE	CVOXX6KC32				

DIMENSIONS AND CONNECTION CENTRE DISTANCES

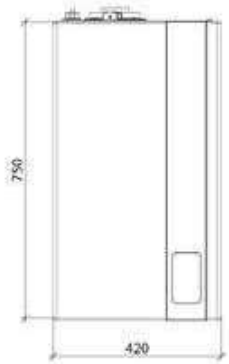

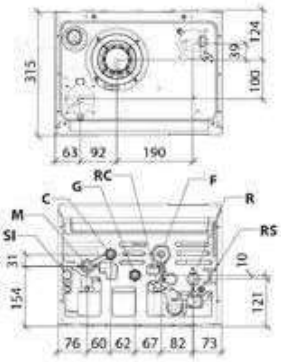

SI	Trap inspection cap	**RC**	Filler tap
M	CH system flow (3/4")	**F**	Cold water inlet (1/2")
C	DHW outlet (1\2")	**R**	CH system return (3/4")
G	Gas inlet (1/2")	**RS**	Discharge tap

Technical specifications	um	KC 12	KC 24	KC 28	KC 32
Nominal heat input (Qn)	kW	12,0	23,7	26,4	30,4
Nominal heat output (80-60°C) (Pn)	kW	11,7	23,0	25,5	29,4
Heat output (50-30°C)	kW	12,6	25,0	28,0	32,3
Reduced heat input (Qr)	kW	2,0	3,0	3,3	4,2
Useful efficiency at nominal input (80-60°C)	%	97,1	96,8	96,7	96,8
Useful efficiency at nominal input (50-30°C)	%	105,1	105,6	106,0	106,2
Useful efficiency at 30% (30°C return)	%	106,0	107,4	107,4	108,3
Heating expansion vessel capacity	l	10	10	10	10
DHW nominal heat input	kW	18,0	27,3	30,4	34,5
Specific DHW flow ΔT=30K	l/min	8,8	13,4	15,5	16,2
NOx emission class	-	6	6	6	6
Electric protection rating	IP	IPX5D	IPX5D	IPX5D	IPX5D

For other technical specifications, see from page 48 - Maximum length of flue gas venting, see page 166

Item	Description	Code
	Coaxial kit Ø 60/100 length 75cm	0CONDASP00
	Remote control, ErP V class (118x85x32 mm)	0CREMOTO04
	Coaxial fitting kit Ø60/100	0KITATCO00
	Splitter kit Ø80+80	0KITSDOP00
	Electrical kit for zone management with external probe	0KITZONE05

Item	Description	Code
	External probe (60x45x31 mm)	0SONDAES01
	Magnetic dirt separator filter	0AFILDEF00
	Kit for connection to solar plant	0KITSOLC07
	Tap kit with filter KC-KRB-CT-RBT	0KITRUBI05
	Electric kit for complex solar plant management	0KITSOLC08

For other accessories, see from page 165

VIRGO KR

WALL-HUNG CONDENSING BOILER CH ONLY
CONNECTION TO AN EXTERNAL HOT WATER STORAGE TANK (OPTIONAL) WITH EXTERNAL 3-WAY VALVE (OPTIONAL)

- **Modulation ratio: 1:9**
- **Multifunction relay for connection to systems with zone valves or to solar plant or to remote alarm signal**
- **Standard management of one type of solar thermal system**
- **Heating expansion vessel - 10 litres**
- Thermosetting polymer-covered stainless steel heat exchanger
- Anti-legionella function for hot water storage tank
- Automatic by-pass
- Thermoregulation with external probe (optional)
- 3-speed circulation pump with built-in air purging device

TOUCH SCREEN INTERFACE

- *DHW and heating temperature setting*
- *Operating mode setting*
- *Solar thermal systems status display*

Available in the following models:

12 24 28 32

Model	Gas type	Code	Heat input		L x H x D	Gross weight
			Nominal (Qn) kW	Nominal DHW kW	mm	kg
KR 12	NATURAL GAS	CVOXX2KR12	12,0	18,0 (*)	420x750x315	34,0
	PROPANE	CVOXX6KR12				
KR 24	NATURAL GAS	CVOXX2KR24	23,7	27,3 (*)	420x750x315	36,0
	PROPANE	CVOXX6KR24				
KR 28	NATURAL GAS	CVOXX2KR28	26,4	30,4 (*)	420x750x315	37,5
	PROPANE	CVOXX6KR28				
KR 32	NATURAL GAS	CVOXX2KR32	30,4	34,5 (*)	420x750x315	39,0
	PROPANE	CVOXX6KR32				

(*) with optional external water tank for DHW.

DIMENSIONS AND CONNECTION CENTRE DISTANCES

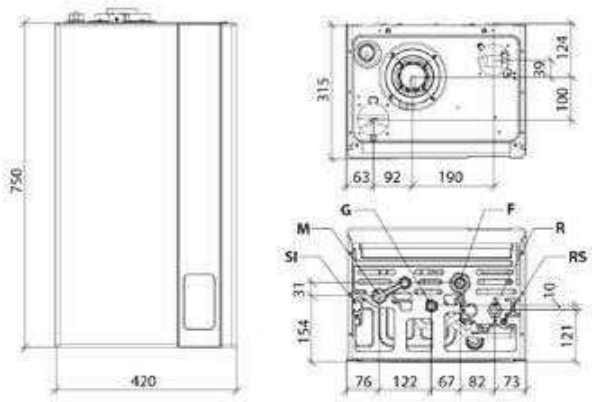

SI Trap inspection cap
M CH system flow (3/4")
G Gas inlet (1/2")
F Cold water inlet (1/2")
R CH system return (3/4")
RS Discharge tap

Technical specifications	um	KR 12	KR 24	KR 28	KR 32
Nominal heat output (Pn)	kW	12	23	26	29
Seasonal energy efficiency of ambient heating (ηs)	%	90	92	92	93
Nominal heat input (Qn)	kW	12,0	23,7	26,4	30,4
Nominal heat output (80-60°C) (Pn)	kW	11,7	23,0	25,5	29,4
Heat output (50-30°C)	kW	12,6	25,0	28,0	32,3
Reduced heat input (Qr)	kW	2,0	3,0	3,3	4,2
Useful efficiency at nominal input (80-60°C)	%	97,1	96,8	96,7	96,8
Useful efficiency at nominal input (50-30°C)	%	105,1	105,6	106,0	106,2
Useful efficiency at 30% (30°C return)	%	106,0	107,4	107,4	108,3
Heating expansion vessel capacity	l	10	10	10	10
DHW nominal heat input	kW	18,0 (*)	27,3 (*)	30,4 (*)	34,5 (*)
NOx emission class	-	6	6	6	6
Electric protection rating	IP	IPX5D	IPX5D	IPX5D	IPX5D

(*) with optional hot water storage tank.
For other technical specifications, see from page 49 - Maximum length of flue gas venting, see page 166

Item	Description	Code
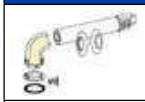	Coaxial kit Ø 60/100 length 75cm	0CONDASP00
	Remote control, ErP V class (118x85x32 mm)	0CREMOTO04
	Coaxial fitting kit Ø60/100	0KITATCO00
	Splitter kit Ø80+80	0KITSDOP00
	Electrical kit for zone management with external probe	0KITZONE05

Item	Description	Code
	External probe (60x45x31 mm)	0SONDAES01
	hot water storage tank temperature probe 3m	0KITSOND00
	Magnetic dirt separator filter	0AFILDEF00
	Tap kit with filter KR-KB-RT	0KITRUBI04
	Electric kit for complex solar plant management	0KITSOLC08

For other accessories, see from page 165

VIRGO KRB

WALL-HUNG CONDENSING BOILER, CH ONLY, WITH INTEGRATED 3-WAY VALVE CONNECTION TO AN EXTERNAL HOT WATER STORAGE TANK (OPTIONAL)

- **Modulation ratio: 1:9**
- **Multifunction relay for connection to systems with zone valves or to solar plant or to remote alarm signal**
- **Standard management of one type of solar thermal system**
- **Thermoregulation with external probe (optional)**
- **Integrated 3-way deviating valve**
- **Heating expansion vessel - 10 litres**
- Thermosetting polymer-covered stainless steel heat exchanger
- CH water flow rate electronic control
- Installation flexibility thanks to IPX5D electrical protection degree
- Freeze protection function for heating and hot water storage tank
- 3-speed circulation pump with built-in air purging device
- Automatic by-pass

TOUCH SCREEN INTERFACE

- *DHW and heating temperature setting*
- *Operating mode setting*
- *Solar thermal systems status display*

Available in the following models:

12 24 28 32

Model	Gas type	Code	Heat input		L x H x D	Gross weight
			Nominal (Qn) kW	Nominal DHW kW	mm	kg
KRB 12	NATURAL GAS	CVOXX2KU12	12,0	18,0 (*)	420x750x315	35,5
	PROPANE	CVOXX6KU12				
KRB 24	NATURAL GAS	CVOXX2KU24	23,7	27,3 (*)	420x750x315	37,0
	PROPANE	CVOXX6KU24				
KRB 28	NATURAL GAS	CVOXX2KU28	26,4	30,4 (*)	420x750x315	38,0
	PROPANE	CVOXX6KU28				
KRB 32	NATURAL GAS	CVOXX2KU32	30,4	34,5 (*)	420x750x315	39,0
	PROPANE	CVOXX6KU32				

(*) with optional hot water storage tank.

DIMENSIONS AND CONNECTION CENTRE DISTANCES

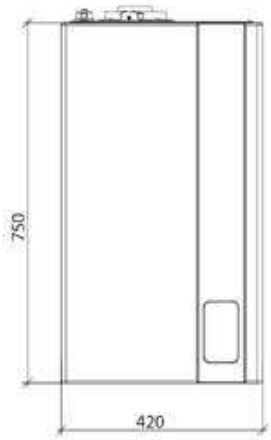

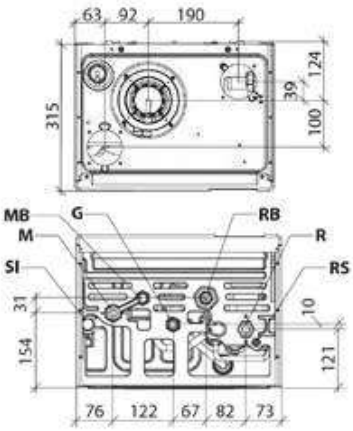

SI	Trap inspection cap	**RB**	Secondary return from hot water storage tank (1/2")
M	CH system flow (3/4")	**R**	CH system return (3/4")
MB	Secondary flow to hot water storage tank (1/2")	**RS**	Discharge tap
G	Gas inlet (1/2")		

Technical specifications	um	KRB 12	KRB 24	KRB 28	KRB 32
Nominal heat input (Qn)	kW	12,0	23,7	26,4	30,4
Nominal heat output (80-60°C) (Pn)	kW	11,7	23,0	25,5	29,4
Heat output (50-30°C)	kW	12,6	25,0	28,0	32,3
Reduced heat input (Qr)	kW	2,0	3,0	3,3	4,2
Useful efficiency at nominal input (80-60°C)	%	97,1	96,8	96,7	96,8
Useful efficiency at nominal input (50-30°C)	%	105,1	105,6	106,0	106,2
Useful efficiency at 30% (30°C return)	%	106,0	107,4	107,4	108,3
Heating expansion vessel capacity	l	10	10	10	10
DHW nominal heat input	kW	18,0 (*)	27,3 (*)	30,4 (*)	34,5 (*)
NOx emission class	-	6	6	6	6
Electric protection rating	IP	IPX5D	IPX5D	IPX5D	IPX5D

(*) with optional hot water storage tank.
For other technical specifications, see from page 50 - Maximum length of flue gas venting, see page 166

Item	Description	Code
	Coaxial kit Ø 60/100 length 75cm	0CONDASP00
	Remote control, ErP V class (118x85x32 mm)	0CREMOTO04
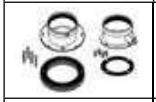	Splitter kit Ø80+80	0KITSDOP00
	Coaxial fitting kit Ø60/100	0KITATCO00
	External probe (60x45x31 mm)	0SONDAES01
	Electrical kit for zone management with external probe	0KITZONE05

Item	Description	Code
	Tap kit with filter KC-KRB-CT-RBT	0KITRUBI05
	Magnetic dirt separator filter	0AFILDEF00
	Coax. adapter kit D.60/100 to D.80/125	0KITADCO00

For other accessories, see from page 165

Accessories supplied as standard

Item	Description
	hot water storage tank temperature probe 3m

DELFIS KC

CONDENSING WALL-HUNG BOILER WITH INSTANTANEOUS PRODUCTION OF DHW

- **High domestic hot water production, more power during DHW operation (18 - 28 - 30 kW)**
- **Modulation ratio: 1:9**
- **Multifunction relay for connection to systems with zone valves or to external pump management or to remote alarm signal**
- **Heating expansion vessel - 9 litres**
- Management of 2 different kinds of solar thermal system (with additional kit)
- Thermoregulation with external probe (optional)
- Compact dimension, only 250 mm deep
- Thermosetting polymer-covered stainless steel heat exchanger
- Prearrangement for connection to Remote Control (optional, supplied by the manufacturer)
- Programmable parameters to adapt the boiler to the installation and alerts history
- Automatic by-pass

Available in the following models:

12 24 28

Model	Gas type	Code	Heat input		L x H x D	Gross weight
			Nominal (Qn) kW	Nominal DHW kW	mm	kg
KC 12	NATURAL GAS	CDOXX2KC12	12,0	18,0	400x700x250	30,5
	PROPANE	CDOXX6KC12				
KC 24	NATURAL GAS	CDOXX2KC24	23,7	27,3	400x700x250	32,0
	PROPANE	CDOXX6KC24				
KC 28	NATURAL GAS	CDOXX2KC28	26,4	30,4	400x700x250	33,5
	PROPANE	CDOXX6KC28				

DIMENSIONS AND CONNECTION CENTRE DISTANCES

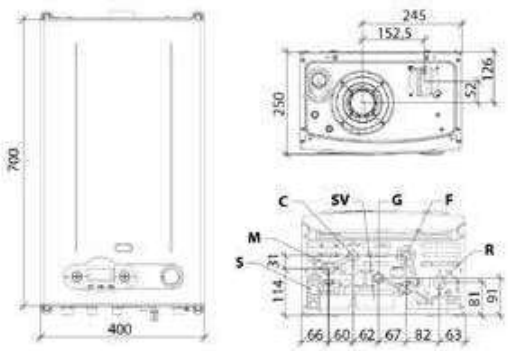

S	Trap inspection cap		
M	CH system flow (3/4")	**G**	Gas inlet (1/2")
C	DHW outlet (1\2")	**F**	Cold water inlet (1/2")
SV	3-bar safety valve drain	**R**	CH system return (3/4")

Technical specifications	um	KC 12	KC 24	KC 28
Nominal heat input (Qn)	kW	12,0	23,7	26,4
Nominal heat output (80-60°C) (Pn)	kW	11,7	22,8	25,5
Heat output (50-30°C)	kW	12,6	24,9	28,0
Reduced heat input (Qr)	kW	2,0	3,0	3,3
Useful efficiency at nominal input (80-60°C)	%	97,1	96,3	96,7
Useful efficiency at nominal input (50-30°C)	%	105,1	105,1	105,9
Useful efficiency at 30% (30°C return)	%	106,0	107,2	107,5
Heating expansion vessel capacity	l	9	9	9
DHW nominal heat input	kW	18,0	27,3	30,4
Specific DHW flow ΔT=30K	l/min	8,6	13,4	15,0
NOx emission class	-	6	6	6
Electric protection rating	IP	IPX4D	IPX4D	IPX4D

For other technical specifications, see from page 51 - Maximum length of flue gas venting, see page 166

Item	Description	Code
	Coaxial kit Ø 60/100 length 75cm	0CONDASP00
	Remote control, ErP V class (118x85x32 mm)	0CREMOTO04
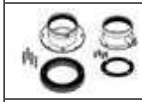	Splitter kit Ø80+80	0KITSDOP00
	Electrical kit for zone management with external probe	0KITZONE05
	External probe (60x45x31 mm)	0SONDAES01
	Coax. adapter kit D.60/100 to D.80/125	0KITADCO00

Item	Description	Code
	Coaxial fitting kit Ø60/100	0KITATCO00
	Electric kit for complex solar plant management	0KITSOLC08
	Magnetic dirt separator filter	0AFILDEF00
	Kit for connection to solar plant	0KITSOLC07
	Tap kit with filter KC-KRB-CT-RBT	0KITRUBI05

For other accessories, see from page 165

DELFIS KR

WALL-HUNG CONDENSING BOILER CH ONLY
CONNECTION TO AN EXTERNAL HOT WATER STORAGE TANK (OPTIONAL) WITH EXTERNAL 3-WAY VALVE (OPTIONAL)

- **Multifunction relay for connection to systems with zone valves or to external pump management or to remote alarm signal**
- **Modulation ratio: 1:9**
- **Heating expansion vessel - 9 litres**
- Freeze protection function for heating and hot water storage tank
- Thermoregulation with external probe (optional)
- Compact dimension, only 250 mm deep
- Thermosetting polymer-covered stainless steel heat exchanger
- Prearrangement for connection to Remote Control (optional, supplied by the manufacturer)
- Programmable parameters to adapt the boiler to the installation and alerts history
- Automatic by-pass

Available in the following models:

12 24 28

Model	Gas type	Code	Heat input		L x H x D	Gross weight
			Nominal (Qn) kW	Nominal DHW kW	mm	kg
KR 12	NATURAL GAS	CDOXX2KR12	12,0	18,0 (*)	400x700x250	29,5
	PROPANE	CDOXX6KR12				
KR 24	NATURAL GAS	CDOXX2KR24	23,7	27,3 (*)	400x700x250	32,0
	PROPANE	CDOXX6KR24				
KR 28	NATURAL GAS	CDOXX2KR28	26,4	30,4 (*)	400x700x250	31,0
	PROPANE	CDOXX6KR28				

(*) with optional hot water storage tank.

DIMENSIONS AND CONNECTION CENTRE DISTANCES

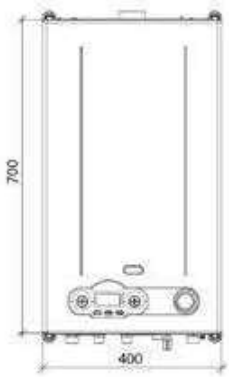

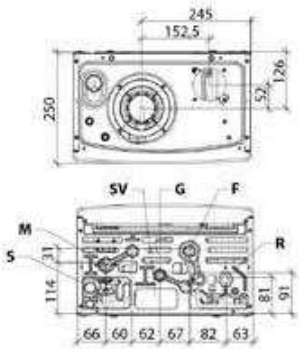

S	Trap inspection cap	**G**	Gas inlet (1/2")
M	CH system flow (3/4")	**F**	Cold water inlet (1/2")
SV	3-bar safety valve drain	**R**	CH system return (3/4")

Technical specifications	um	KR 12	KR 24	KR 28
Nominal heat output (80-60°C) (Pn)	kW	11,7	22,8	25,5
Heat output (50-30°C)	kW	12,6	24,9	28,0
Reduced heat input (Qr)	kW	2,0	3,0	3,3
Useful efficiency at nominal input (80-60°C)	%	97,1	96,3	96,7
Useful efficiency at nominal input (50-30°C)	%	105,1	105,1	105,9
Useful efficiency at 30% (30°C return)	%	106,0	107,2	107,5
Heating expansion vessel capacity	l	9	9	9
DHW nominal heat input	kW	18,0 (*)	27,3 (*)	30,4 (*)
NOx emission class	-	6	6	6
Electric protection rating	IP	IPX4D	IPX4D	IPX4D

(*) with optional hot water storage tank.
For other technical specifications, see from page 52 - Maximum length of flue gas venting, see page 166

Item	Description	Code
	Coaxial kit Ø 60/100 length 75cm	0CONDASP00
	Remote control, ErP V class (118x85x32 mm)	0CREMOTO04
	Tap kit with filter KR-KB-RT	0KITRUBI04
	Splitter kit Ø80+80	0KITSDOP00
	Electrical kit for zone management with external probe	0KITZONE05
	Compact wall pipe cover	0COPETUB00

Item	Description	Code
	External probe (60x45x31 mm)	0SONDAES01
	Coaxial fitting kit Ø60/100	0KITATCO00
	Coax. adapter kit D.60/100 to D.80/125	0KITADCO00
	hot water storage tank temperature probe 3m	0KITSOND00
	Magnetic dirt separator filter	0AFILDEF00

For other accessories, see from page 165

DELFIS KRB

WALL-HUNG CONDENSING BOILER, CH ONLY, WITH INTEGRATED 3-WAY VALVE CONNECTION TO AN EXTERNAL HOT WATER STORAGE TANK (OPTIONAL)

- **Multifunction relay for connection to systems with zone valves or to external pump management or to remote alarm signal**
- **Modulation ratio: 1:9**
- **Heating expansion vessel - 9 litres**
- **Integrated 3-way deviating valve**
- Freeze protection function for heating and hot water storage tank
- Thermoregulation with external probe (optional)
- Compact dimension, only 250 mm deep
- Thermosetting polymer-covered stainless steel heat exchanger
- Prearrangement for connection to Remote Control (optional, supplied by the manufacturer)
- Programmable parameters to adapt the boiler to the installation and alerts history
- Automatic by-pass

Available in the following models:

12 24 28

Model	Gas type	Code	Heat input		L x H x D	Gross weight
			Nominal (Qn) kW	Nominal DHW kW	mm	kg
KRB 12	NATURAL GAS	CDOXX2KU12	12,0	18,0 (*)	400x700x250	29,5
	PROPANE	CDOXX6KU12				
KRB 24	NATURAL GAS	CDOXX2KU24	23,7	27,3 (*)	400x700x250	31,0
	PROPANE	CDOXX6KU24				
KRB 28	NATURAL GAS	CDOXX2KU28	26,4	30,4 (*)	400x700x250	32,5
	PROPANE	CDOXX6KU28				

(*) with optional hot water storage tank.

DIMENSIONS AND CONNECTION CENTRE DISTANCES

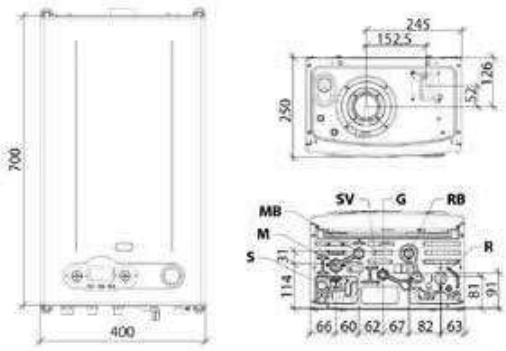

S	Trap inspection cap		
M	CH system flow (3/4")	**G**	Gas inlet (1/2")
MB	Secondary flow to hot water storage tank (1/2")	**RB**	Secondary return from hot water storage tank (1/2")
SV	3-bar safety valve drain	**R**	CH system return (3/4")

Technical specifications	um	KRB 12	KRB 24	KRB 28
Nominal heat input (Qn)	kW	12,0	23,7	26,4
Nominal heat output (80-60°C) (Pn)	kW	11,7	22,8	25,5
Heat output (50-30°C)	kW	12,6	24,9	28,0
Reduced heat input (Qr)	kW	2,0	3,0	3,3
Useful efficiency at nominal input (80-60°C)	%	97,1	96,3	96,7
Useful efficiency at nominal input (50-30°C)	%	105,1	105,1	105,9
Useful efficiency at 30% (30°C return)	%	106,0	107,2	107,5
Heating expansion vessel capacity	l	9	9	9
DHW nominal heat input	kW	18,0 (*)	27,3 (*)	30,4 (*)
NOx emission class	-	6	6	6
Electric protection rating	IP	IPX4D	IPX4D	IPX4D

(*) with optional hot water storage tank.
For other technical specifications, see from page 53 - Maximum length of flue gas venting, see page 166

Item	Description	Code
	Coaxial kit Ø 60/100 length 75cm	0CONDASP00
	Remote control, ErP V class (118x85x32 mm)	0CREMOTO04
	Tap kit with filter KC-KRB-CT-RBT	0KITRUBI05
	Splitter kit Ø80+80	0KITSDOP00
	Electrical kit for zone management with external probe	0KITZONE05
	External probe (60x45x31 mm)	0SONDAES01
	Coaxial fitting kit Ø60/100	0KITATCO00

Item	Description	Code
	Coax. adapter kit D.60/100 to D.80/125	0KITADCO00
	Magnetic dirt separator filter	0AFILDEF00
	Electric kit for complex solar plant management	0KITSOLC08
	Compact wall pipe cover	0COPETUB00

For other accessories, see from page 165

Accessories supplied as standard

Item	Description
	hot water storage tank temperature probe 3m

LEO KC

CONDENSING WALL-HUNG BOILER WITH INSTANTANEOUS PRODUCTION OF DHW

- **High efficiency stainless steel heat exchanger with single coil and wide passage section**
- **Heating expansion vessel - 9 litres**
- **Compact dimension, only 250 mm deep**
- **Easy to install in pre-existing plants thanks to: central flue vent, wall fixing bracket and double hole for split suction**
- **Thermoregulation with external probe (optional)**
- **Backlit LCD user interface with diagnostics**
- Modulation ratio: 1:5
- Fully pre-mixed burner
- Programmable parameters to adapt the boiler to the installation and alerts history
- Stainless steel plate DHW heat exchanger
- Class 6 of NOx emissions
- Automatic by-pass

Available in the following models:

24

Model	Gas type	Code	Heat input		L x H x D	Gross weight
			Nominal (Qn) kW	Nominal DHW kW	mm	kg
KC 24	NATURAL GAS	CLFXX2KC24	20,0	24,0	400x700x250	29,0
	PROPANE	CLFXX6KC24				

DIMENSIONS AND CONNECTION CENTRE DISTANCES

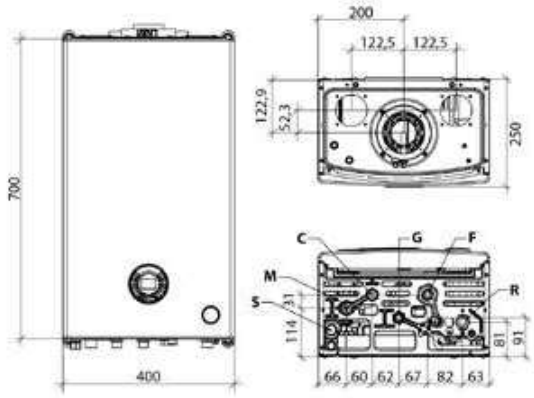

S	Condensate drain	**G**	Gas inlet (1/2")
M	CH system flow (3/4")	**F**	Cold water inlet (1/2")
C	DHW outlet (1\2")	**R**	CH system return (3/4")

Technical specifications	um	KC 24
Nominal heat input (Qn)	kW	20,0
Nominal heat output (80-60°C) (Pn)	kW	19,4
Heat output (50-30°C)	kW	21,2
Reduced heat input (Qr)	kW	5,0
Useful efficiency at nominal input (80-60°C)	%	97,1
Useful efficiency at nominal input (50-30°C)	%	106,1
Useful efficiency at 30% (30°C return)	%	108,1
Heating expansion vessel capacity	l	9
DHW nominal heat input	kW	24,0
Specific DHW flow ΔT=30K	l/min	12,0
NOx emission class	-	6
Electric protection rating	IP	IPX4D

For other technical specifications, see from page 54 - Maximum length of flue gas venting, see page 166

Item	Description	Code
	Coaxial kit Ø 60/100 length 75cm	0CONDASP00
	Remote control, ErP V class (118x85x32 mm)	0CREMOTO04
	Ambient temperature probe	0KITSAMB00
	Coaxial fitting kit Ø60/100	0KITATCO00
	Splitter kit Ø80+80	0KITSDOP00

Item	Description	Code
	External probe (60x45x31 mm)	0SONDAES01
	Magnetic dirt separator filter	0AFILDEF00
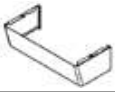	Compact wall pipe cover	0COPETUB00
	Tap kit with filter KC-KRB-CT-RBT	0KITRUBI05
	Coax. adapter kit D.60/100 to D.80/125	0KITADCO00

For other accessories, see from page 165

PHOENIX KRB

CONDENSING FLOOR-STANDING BOILER WITH AN INTEGRATED SINGLE COIL WATER TANK FOR THE PRODUCTION OF DHW

Available in the following models:

12 24 28 32

- **130-litre water heater with single coil**
- **Available in the KRB version with one direct zone, in the KRB-V version with one direct and one mixed integrated zones, and in the KRB-Z version with one direct and two mixed integrated zones**
- **Modulation ratio: 1:9**
- **Hydraulic connections on the sides**
- **Front door for immediate access to boiler**
- Thermoregulation with external probe (optional)
- Thermosetting polymer-covered stainless steel heat exchanger
- 5-litre DHW expansion vessel

TOUCH SCREEN INTERFACE

- *Modulation thermostat with ambient probe*
- *Day/night temperature level selection*
- *Weekly programming*
- *Timer and ambient temperature setting*
- *Heater DHW "comfort" function enabling*

Model	Gas type	Code	Heat input		L x H x D	Gross weight
			Nominal (Qn) kW	Nominal DHW kW	mm	kg
KRB 12	NATURAL GAS	CPAXX2KU12	12,0	18,0	600x1857x642	189,0
	PROPANE	CPAXX6KU12				
KRB 24	NATURAL GAS	CPAXX2KU24	23,7	27,3	600x1857x643	190,0
	PROPANE	CPAXX6KU24				
KRB 28	NATURAL GAS	CPAXX2KU28	26,4	30,4	600x1857x644	192,0
	PROPANE	CPAXX6KU28				
KRB 32	NATURAL GAS	CPAXX2KU32	30,4	34,5	600x1857x645	193,0
	PROPANE	CPAXX6KU32				
KRB V 12	NATURAL GAS	CPAXX2KV12	12,0	18,0	600x1857x642	201,00
	PROPANE	CPAXX6KV12				
KRB V 24	NATURAL GAS	CPAXX2KV24	23,7	27,3	600x1857x643	203,00
	PROPANE	CPAXX6KV24				
KRB V 28	NATURAL GAS	CPAXX2KV28	26,4	30,4	600x1857x644	204,00
	PROPANE	CPAXX6KV28				
KRB V 32	NATURAL GAS	CPAXX2KV32	30,4	34,5	600x1857x645	205,00
	PROPANE	CPAXX6KV32				
KRB Z 12	NATURAL GAS	CPAXX2KZ12	12,0	18,0	600x1857x642	204,00
	PROPANE	CPAXX6KZ12				
KRB Z 24	NATURAL GAS	CPAXX2KZ24	23,7	27,3	600x1857x643	205,00
	PROPANE	CPAXX6KZ24				
KRB Z 28	NATURAL GAS	CPAXX2KZ28	26,4	30,4	600x1857x644	207,00
	PROPANE	CPAXX6KZ28				
KRB Z 32	NATURAL GAS	CPAXX2KZ32	30,4	34,5	600x1857x645	208,00
	PROPANE	CPAXX6KZ32				

DIMENSIONS AND CONNECTION CENTRE DISTANCES

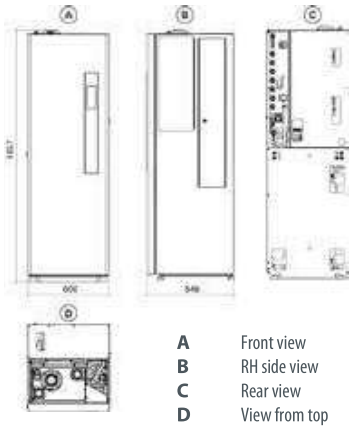

A Front view
B RH side view
C Rear view
D View from top

Technical specifications	um	KRB 12	KRB 24	KRB 28	KRB 32
Nominal heat input (Qn)	kW	12,0	23,7	26,4	30,4
Nominal heat output (80-60°C) (Pn)	kW	11,6	22,9	25,4	29,4
Heat output (50-30°C)	kW	12,6	24,9	27,9	32,3
Reduced heat input (Qr)	kW	2,0	3,0	3,3	4,2
Useful efficiency at nominal input (80-60°C)	%	97,1	96,7	96,4	96,8
Useful efficiency at nominal input (50-30°C)	%	105,1	105,1	105,5	106,2
Useful efficiency at 30% (30°C return)	%	106,0	106,5	107,0	108,3
Heating expansion vessel capacity	l	10	10	10	10
DHW nominal heat input	kW	18,0	27,3	30,4	34,5
Specific DHW flow ΔT=30K	l/min	19,5	22	22,5	23,4
NOx emission class	-	6	6	6	6
Electric protection rating	IP	IPX5D	IPX5D	IPX5D	IPX5D

For other technical specifications, see from page 55 - Maximum length of flue gas venting, see page 166

Item	Description	Code
	Coaxial kit Ø 60/100 length 75cm	0CONDASP00
	Remote control, ErP V class (118x85x32 mm)	0CREMOTO04
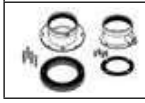	Splitter kit Ø80+80	0KITSDOP00

Item	Description	Code
	External probe (60x45x31 mm)	0SONDAES01
	Electrical kit for zone management with external probe	0KITZONE05
	Giava recirculation optional kit	0KRICIRC00

For other accessories, see from page 165

PEGASUS SOLAR KRBS

FLOOR-STANDING CONDENSING BOILER WITH AN INTEGRATED DOUBLE COIL WATER TANK FOR THE PRODUCTION OF DHW
WITH HYDRAULIC UNIT AND ELECTRONICS FOR MANAGING A SOLAR THERMAL PLANT

Available in the following models:

12 24 28 32

- **Modulation ratio: 1:9**
- **300-litre hot water storage tank with double coil**
- **Available in the KRBS version with one direct zone, in the KRBS-V version with one direct and one mixed integrated zones, and in the KRBS-Z version with one direct and two mixed integrated zones**
- **Available in the M versions, with 3- way solar deviating valve for thermal discharge**
- **Front door for immediate access to boiler**
- Thermosetting polymer-covered stainless steel heat exchanger
- Hydraulic connections on the sides
- Thermoregulation with external probe (optional)
- Heating expansion vessel - 10 litres
- 12-litre DHW expansion vessel
- 18-litre solar expansion vessel
- Additional 5-litre safety solar tank

TOUCH SCREEN INTERFACE

- *Modulation thermostat with ambient probe*
- *Day/night temperature level selection*
- *Weekly programming*
- *Timer and ambient temperature setting*
- *Heater DHW "comfort" function enabling*

Technical specifications	um	KRBS 12	KRBS 24	KRBS 28	KRBS 32
Nominal heat input (Qn)	kW	12,0	23,7	26,4	30,4
Nominal heat output (80-60°C) (Pn)	kW	11,6	22,9	25,4	29,4
Heat output (50-30°C)	kW	12,6	24,9	27,9	32,3
Reduced heat input (Qr)	kW	2,0	3,0	3,3	4,2
Useful efficiency at nominal input (80-60°C)	%	97,1	96,7	96,4	96,8
Useful efficiency at nominal input (50-30°C)	%	105,1	105,1	105,5	106,2
Useful efficiency at 30% (30°C return)	%	106,0	106,5	107,0	108,3
Heating expansion vessel capacity	l	10	10	10	10
DHW nominal heat input	kW	18,0	27,3	30,4	34,5
Specific DHW flow ΔT=30K	l/min	23,6	23,6	25,3	26,3
NOx emission class	-	6	6	6	6
Electric protection rating	IP	IPX5D	IPX5D	IPX5D	IPX5D

For other technical specifications, see from page 56 - Maximum length of flue gas venting, see page 166

Model	Gas type	Code	Heat input		L x H x D	Gross weight
			Nominal (Qn) kW	Nominal DHW kW	mm	kg
KRBS 12	NATURAL GAS	CPVXX2KD12	12,0	18,0	600x1857x985	270,0
	PROPANE	CPVXX6KD12				
KRBS 24	NATURAL GAS	CPVXX2KD24	23,7	27,3	600x1857x985	272,0
	PROPANE	CPVXX6KD24				
KRBS 28	NATURAL GAS	CPVXX2KD28	26,4	30,4	600x1857x985	273,0
	PROPANE	CPVXX6KD28				
KRBS 32	NATURAL GAS	CPVXX2KD32	30,4	34,5	600x1857x985	274,0
	PROPANE	CPVXX6KD32				
KRBS M 12	NATURAL GAS	CPVXX2KE12	12,0	18,0	600x1857x985	271,00
	PROPANE	CPVXX6KE12				
KRBS M 24	NATURAL GAS	CPVXX2KE24	23,7	27,3	600x1857x985	273,00
	PROPANE	CPVXX6KE24				
KRBS M 28	NATURAL GAS	CPVXX2KE28	26,4	30,4	600x1857x985	274,00
	PROPANE	CPVXX6KE28				
KRBS M 32	NATURAL GAS	CPVXX2KE32	30,4	34,5	600x1857x985	275,00
	PROPANE	CPVXX6KE32				
KRBS MV 12	NATURAL GAS	CPVXX2KG12	12,0	18,0	600x1857x985	283,00
	PROPANE	CPVXX6KG12				
KRBS MV 24	NATURAL GAS	CPVXX2KG24	23,7	27,3	600x1857x985	285,00
	PROPANE	CPVXX6KG24				
KRBS MV 28	NATURAL GAS	CPVXX2KG28	26,4	30,4	600x1857x985	283,00
	PROPANE	CPVXX6KG28				
KRBS MV 32	NATURAL GAS	CPVXX2KG32	30,4	34,5	600x1857x985	287,00
	PROPANE	CPVXX6KG32				
KRBS MZ 12	NATURAL GAS	CPVXX2KK12	12,0	18,0	600x1857x985	287,00
	PROPANE	CPVXX6KK12				
KRBS MZ 24	NATURAL GAS	CPVXX2KK24	23,7	27,3	600x1857x985	288,00
	PROPANE	CPVXX6KK24				
KRBS MZ 28	NATURAL GAS	CPVXX2KK28	26,4	30,4	600x1857x985	290,00
	PROPANE	CPVXX6KK28				
KRBS MZ 32	NATURAL GAS	CPVXX2KK32	30,4	34,5	600x1857x985	291,00
	PROPANE	CPVXX6KK32				
KRBS V 12	NATURAL GAS	CPVXX2KF12	12,0	18,0	600x1857x985	283,00
	PROPANE	CPVXX6KF12				
KRBS V 24	NATURAL GAS	CPVXX2KF24	23,7	27,3	600x1857x985	284,00
	PROPANE	CPVXX6KF24				
KRBS V 28	NATURAL GAS	CPVXX2KF28	26,4	30,4	600x1857x985	286,00
	PROPANE	CPVXX6KF28				
KRBS V 32	NATURAL GAS	CPVXX2KF32	30,4	34,5	600x1857x985	287,00
	PROPANE	CPVXX6KF32				
KRBS Z 12	NATURAL GAS	CPVXX2KJ12	12,0	18,0	600x1857x985	286,00
	PROPANE	CPVXX6KJ12				
KRBS Z 24	NATURAL GAS	CPVXX2KJ24	23,7	27,3	600x1857x985	287,00
	PROPANE	CPVXX6KJ24				
KRBS Z 28	NATURAL GAS	CPVXX2KJ28	26,4	30,4	600x1857x985	289,00
	PROPANE	CPVXX6KJ28				
KRBS Z 32	NATURAL GAS	CPVXX2KJ32	30,4	34,5	600x1857x985	291,00
	PROPANE	CPVXX6KJ32				

For other technical specifications, see from page 56 - Maximum length of flue gas venting, see page 166

Item	Description	Code
	Coaxial kit Ø 60/100 length 75cm	0CONDASP00
	Remote control, ErP V class (118x85x32 mm)	0CREMOTO04
	Splitter kit Ø80+80	0KITSDOP00
	Temperature probe for solar plants	PSPTMILL00

Item	Description	Code
	External probe (60x45x31 mm)	0SONDAES01
	DHW recirculation kit	0KRICIRC01
	Coaxial fitting kit Ø60/100	0KITATCO00

For other accessories, see from page 165

DIMENSIONS

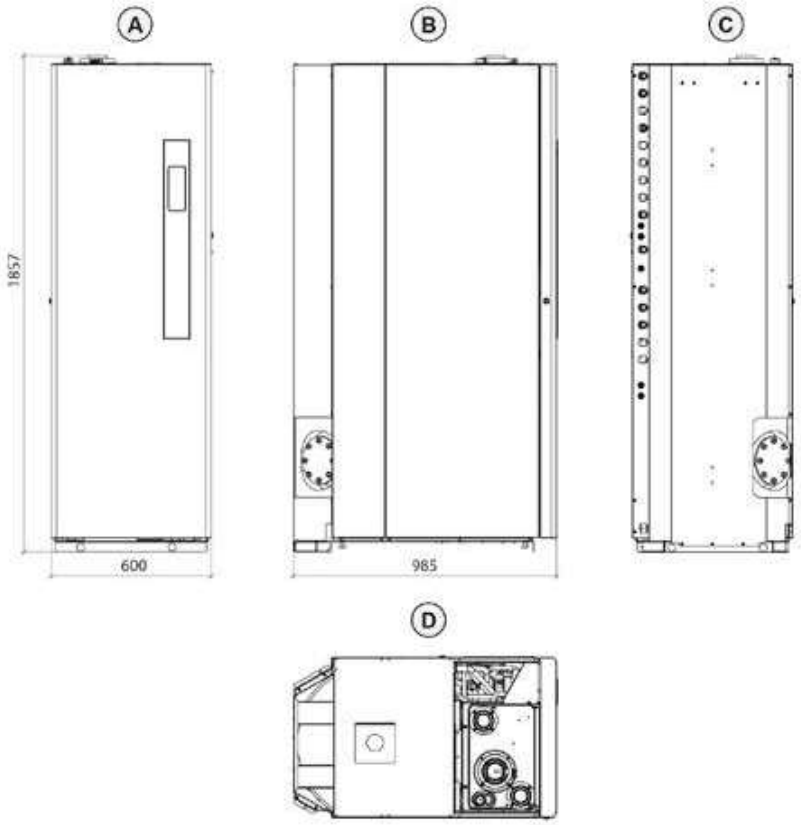

A Front view
B LH view
C Rear view
D View from top

PEGASUS SOLAR COMPACT KBS

FLOOR STANDING CONDENSING BOILER WITH INSTANT PRODUCTION OF DHW AND WITH SINGLE-COIL SOLAR DHW HOT WATER STORAGE TANK
WITH HYDRAULIC UNIT AND ELECTRONICS FOR MANAGING A SOLAR THERMAL PLANT

Available in the following models:

24 32

- **Modulation ratio: 1:9**
- **Hydraulic connections on the sides**
- **170-litre hot water storage tank with single coil**
- **DHW thermostatic mixing valve**
- **Front door for immediate access to boiler**
- **Available in the KBS version with one direct zone, in the KBS-V version with one direct and one mixed integrated zones, and in the KBS-Z version with one direct and two mixed integrated zones**
- Thermosetting polymer-covered stainless steel heat exchanger
- Thermoregulation with external probe (optional)
- Heating expansion vessel - 10 litres
- 12-litre DHW expansion vessel
- 12-litre solar expansion vessel

TOUCH SCREEN INTERFACE

- *Modulation thermostat with ambient probe*
- *Day/night temperature level selection*
- *Weekly programming*
- *Timer and ambient temperature setting*
- *DHW "comfort" function enabling*

Model	Gas type	Code	Heat input		L x H x D	Gross weight
			Nominal (Qn) kW	Nominal DHW kW	mm	kg
KBS 24	NATURAL GAS	CPUXX2KM24	23,7	27,3	600x1857x645	206,0
	PROPANE	CPUXX6KM24				
KBS 32	NATURAL GAS	CPUXX2KM32	30,4	34,5	600x1857x645	209,0
	PROPANE	CPUXX6KM32				
KBS V 24	NATURAL GAS	CPUXX2KN24	23,7	27,3	600x1857x645	218,00
	PROPANE	CPUXX6KN24				
KBS V 32	NATURAL GAS	CPUXX2KN32	30,4	34,5	600x1857x645	221,00
	PROPANE	CPUXX6KN32				
KBS Z 24	NATURAL GAS	CPUXX2KP24	23,7	27,3	600x1857x645	221,00
	PROPANE	CPUXX6KP24				
KBS Z 32	NATURAL GAS	CPUXX2KP32	30,4	34,5	600x1857x645	224,00
	PROPANE	CPUXX6KP32				

DIMENSIONS AND CONNECTION CENTRE DISTANCES

A Front view
B RH side view
C Rear view
D View from top
E Opening for hydraulic connections

Technical specifications	um	KBS 24	KBS 32
Nominal heat input (Qn)	kW	23,7	30,4
Nominal heat output (80-60°C) (Pn)	kW	22,9	29,4
Heat output (50-30°C)	kW	24,9	32,3
Reduced heat input (Qr)	kW	3,0	4,2
Useful efficiency at nominal input (80-60°C)	%	96,7	96,8
Useful efficiency at nominal input (50-30°C)	%	105,1	106,2
Useful efficiency at 30% (30°C return)	%	106,5	108,3
Heating expansion vessel capacity	l	10	10
DHW nominal heat input	kW	27,3	34,5
Specific DHW flow ΔT=30K	l/min	13,4	16,2
NOx emission class	-	6	6
Electric protection rating	IP	IPX5D	IPX5D

(**) with comfort function disabled.
For other technical specifications, see from page 57 - Maximum length of flue gas venting, see page 166

Item	Description	Code
	Coaxial kit Ø 60/100 length 75cm	0CONDASP00
	Remote control, ErP V class (118x85x32 mm)	0CREMOTO04
	Splitter kit Ø80+80	0KITSDOP00

Item	Description	Code
	Temperature probe for solar plants	PSPTMILL00
	External probe (60x45x31 mm)	0SONDAES01

For other accessories, see from page 165

FOR THE GAS CATEGORIES OF THE PRODUCTS CONTACT FONDITAL S.P.A.

TECHNICAL SPECIFICATIONS OF CONDENSING BOILERS

Technical specifications	um	Orion	Orion	Orion	Orion
Model	-	KC 12	KC 24	KC 28	KC 32
Type	-	B23-B23P-B33-C13-C33-C43-C53-C63-C83-C13X-C33X-C43X-C53X-C63X-C83X-C93-C93X	B23-B23P-B33-C13-C33-C43-C53-C63-C83-C13X-C33X-C43X-C53X-C63X-C83X-C93-C93X	B23-B23P-B33-C13-C33-C43-C53-C63-C83-C13X-C33X-C43X-C53X-C63X-C83X-C93-C93X	B23-B23P-B33-C13-C33-C43-C53-C63-C83-C13X-C33X-C43X-C53X-C63X-C83X-C93-C93X
Nominal heat input (Qn)	kW	12,0	23,7	26,4	30,4
Reduced heat input (Qr)	kW	2,0	3,0	3,3	4,2
Nominal heat output (80-60°C) (Pn)	kW	11,7	23,0	25,5	29,4
Reduced heat output (80-60°C) (Pr)	kW	1,8	2,6	3,0	3,9
Heat output (50-30°C)	kW	12,6	25,0	28,0	32,3
Reduced heat output (50-30°C)	kW	2,1	3,2	3,5	4,4
Useful efficiency at nominal input (80-60°C)	%	97,1	96,8	96,7	96,8
Useful efficiency at nominal input (50-30°C)	%	105,1	105,6	106,0	106,2
Useful efficiency at 30% (30°C return)	%	106,0	107,4	107,4	108,3
Heating circuit working pressure (min-max)	bar	0,5-3,0	0,5-3,0	0,5-3,0	0,5-3,0
CH temperature setting range	°C	20-78	20-78	20-78	20-78
CH maximum working temperature	°C	83	83	83	83
Heating expansion vessel capacity	l	10	10	10	10
DHW nominal heat input	kW	18,0	27,3	30,4	34,5
DHW minimum heat input	kW	2,0	3,0	3,3	4,2
DHW nominal heat output (ΔT 30°C)	kW	18,6	27,4	29,2	33,4
DHW circuit working pressure (min-max)	bar	0,5-6,0	0,5-6,0	0,5-6,0	0,5-6,0
Specific DHW flow ΔT=30K	l/min	8,8	13,4	15,5	16,2
Qualification of domestic hot water	-	* * *	* * *	* * *	* * *
DHW temperature range	°C	35-57	35-57	35-57	35-57
DHW maximum working temperature	°C	62	62	62	62
NOx emission class	-	6	6	6	6
Casing heat loss with burner on at nominal heat input	%	0,40	0.44	1.04	0,87
Casing heat loss with burner off	%	0,53	0,21	0,20	0,19
Chimney heat loss with burner on at nominal heat input	%	2,50	2.72	2.26	2,33
Air-flue ΔT at nominal heat input	°C	57,9	61	60	60
Flue gas flow at nominal heat input	g/s	8,25	12,43	13,93	15,81
CO2 at nominal heat input of heating (Natural gas)	%	9	9	9	9
CO2 at nominal heat input of heating (Propane)	%	10	10	10	10
Power supply voltage/frequency	V/Hz	230/50	230/50	230/50	230/50
Maximum power consumption	W	88	97	101	106
Circulation pump power input	W	50	50	50	50
Electric protection rating	IP	IPX5D	IPX5D	IPX5D	IPX5D
Air intake/flue gas vent pipe diameter	mm	80+80 60+60 100/60 125/80	80+80 60+60 100/60 125/80	80+80 60+60 100/60 125/80	80+80 60+60 100/60 125/80

TECHNICAL SPECIFICATIONS OF CONDENSING BOILERS

Technical specifications	um	Orion	Orion	Orion	Orion
Model	-	KR 12	KR 24	KR 28	KR 32
Type	-	B23-B23P-B33-C13-C33-C43-C53-C63-C83-C13X-C33X-C43X-C53X-C63X-C83X-C93-C93X	B23-B23P-B33-C13-C33-C43-C53-C63-C83-C13X-C33X-C43X-C53X-C63X-C83X-C93-C93X	B23-B23P-B33-C13-C33-C43-C53-C63-C83-C13X-C33X-C43X-C53X-C63X-C83X-C93-C93X	B23-B23P-B33-C13-C33-C43-C53-C63-C83-C13X-C33X-C43X-C53X-C63X-C83X-C93-C93X
Nominal heat input (Qn)	kW	12,0	23,7	26,4	30,4
Reduced heat input (Qr)	kW	2,0	3,0	3,3	4,2
Nominal heat output (80-60°C) (Pn)	kW	11,7	23,0	25,5	29,4
Reduced heat output (80-60°C) (Pr)	kW	1,8	2,6	3,0	3,9
Heat output (50-30°C)	kW	12,6	25,0	28,0	32,3
Reduced heat output (50-30°C)	kW	2,1	3,2	3,5	4,4
Useful efficiency at nominal input (80-60°C)	%	97,1	96,8	96,7	96,8
Useful efficiency at nominal input (50-30°C)	%	105,1	105,6	106,0	106,2
Useful efficiency at 30% (30°C return)	%	106,0	107,4	107,4	108,3
Heating circuit working pressure (min-max)	bar	0,5-3,0	0,5-3,0	0,5-3,0	0,5-3,0
CH temperature setting range	°C	20-78	20-78	20-78	20-78
CH maximum working temperature	°C	83	83	83	83
Heating expansion vessel capacity	l	10	10	10	10
DHW nominal heat input	kW	18,0 (*)	27,3 (*)	30,4 (*)	34,5 (*)
DHW minimum heat input	kW	2,0 (*)	3,0 (*)	3,3 (*)	4,2 (*)
DHW temperature range	°C	35-65 (***)	35-65 (***)	35-65 (***)	35-65 (***)
DHW maximum working temperature	°C	65 (***)	65 (***)	65 (***)	65 (***)
NOx emission class	-	6	6	6	6
Casing heat loss with burner on at nominal heat input	%	0,40	0.44	1.04	0,87
Casing heat loss with burner off	%	0,53	0,21	0,20	0,19
Chimney heat loss with burner on at nominal heat input	%	2,50	2.72	2.26	2,33
Air-flue ΔT at nominal heat input	°C	57,9	61	60	60
Flue gas flow at nominal heat input	g/s	8,25	12,43	13,93	15,81
CO2 at nominal heat input of heating (Natural gas)	%	9	9	9	9
CO2 at nominal heat input of heating (Propane)	%	10	10	10	10
Power supply voltage/frequency	V/Hz	230/50	230/50	230/50	230/50
Maximum power consumption	W	88	97	101	106
Circulation pump power input	W	50	50	50	50
Electric protection rating	IP	IPX5D	IPX5D	IPX5D	IPX5D
Air intake/flue gas vent pipe diameter	mm	80+80 60+60 100/60 125/80	80+80 60+60 100/60 125/80	80+80 60+60 100/60 125/80	80+80 60+60 100/60 125/80

(*) with optional hot water storage tank.
(***) with hot water storage tank probe connected.

TECHNICAL SPECIFICATIONS OF CONDENSING BOILERS

Technical specifications	um	Orion	Orion	Orion	Orion
Model	-	KRB 12	KRB 24	KRB 28	KRB 32
Type	-	B23-B23P-B33-C13-C33-C43-C53-C63-C83-C13X-C33X-C43X-C53X-C63X-C83X-C93-C93X	B23-B23P-B33-C13-C33-C43-C53-C63-C83-C13X-C33X-C43X-C53X-C63X-C83X-C93-C93X	B23-B23P-B33-C13-C33-C43-C53-C63-C83-C13X-C33X-C43X-C53X-C63X-C83X-C93-C93X	B23-B23P-B33-C13-C33-C43-C53-C63-C83-C13X-C33X-C43X-C53X-C63X-C83X-C93-C93X
Nominal heat input (Qn)	kW	12,0	23,7	26,4	30,4
Reduced heat input (Qr)	kW	2,0	3,0	3,3	4,2
Nominal heat output (80-60°C) (Pn)	kW	11,7	23,0	25,5	29,4
Reduced heat output (80-60°C) (Pr)	kW	1,8	2,6	3,0	3,9
Heat output (50-30°C)	kW	12,6	25,0	28,0	32,3
Reduced heat output (50-30°C)	kW	2,1	3,2	3,5	4,4
Useful efficiency at nominal input (80-60°C)	%	97,1	96,8	96,7	96,8
Useful efficiency at nominal input (50-30°C)	%	105,1	105,6	106,0	106,2
Useful efficiency at 30% (30°C return)	%	106,0	107,4	107,4	108,3
Heating circuit working pressure (min-max)	bar	0,5-3,0	0,5-3,0	0,5-3,0	0,5-3,0
CH temperature setting range	°C	20-78	20-78	20-78	20-78
CH maximum working temperature	°C	83	83	83	83
Heating expansion vessel capacity	l	10	10	10	10
DHW nominal heat input	kW	18,0 (*)	27,3 (*)	30,4 (*)	34,5 (*)
DHW minimum heat input	kW	2,0 (*)	3,0 (*)	3,3 (*)	4,2 (*)
DHW temperature range	°C	35-65 (***)	35-65 (***)	35-65 (***)	35-65 (***)
DHW maximum working temperature	°C	65 (***)	65 (***)	65 (***)	65 (***)
NOx emission class	-	6	6	6	6
Casing heat loss with burner on at nominal heat input	%	0,40	0.44	1.04	0,87
Casing heat loss with burner off	%	0,53	0,21	0,20	0,19
Chimney heat loss with burner on at nominal heat input	%	2,50	2.72	2.26	2,33
Air-flue ΔT at nominal heat input	°C	57,9	61	60	60
Flue gas flow at nominal heat input	g/s	8,25	12,43	13,93	15,81
CO2 at nominal heat input of heating (Natural gas)	%	9	9	9	9
CO2 at nominal heat input of heating (Propane)	%	10	10	10	10
Power supply voltage/frequency	V/Hz	230/50	230/50	230/50	230/50
Maximum power consumption	W	88	97	101	106
Circulation pump power input	W	50	50	50	50
Electric protection rating	IP	IPX5D	IPX5D	IPX5D	IPX5D
Air intake/flue gas vent pipe diameter	mm	80+80 60+60 100/60 125/80	80+80 60+60 100/60 125/80	80+80 60+60 100/60 125/80	80+80 60+60 100/60 125/80

(*) with optional hot water storage tank.
(***) with hot water storage tank probe connected.

TECHNICAL SPECIFICATIONS OF CONDENSING BOILERS

Technical specifications	um	Orion	Orion
Model	-	KB 24	KB 32
Type	-	B23-B23P-B33-C13-C33-C43-C53-C63-C83-C13X-C33X-C43X-C53X-C63X-C83X-C93	B23-B23P-B33-C13-C33-C43-C53-C63-C83-C13X-C33X-C43X-C53X-C63X-C83X-C93
Nominal heat input (Qn)	kW	23,7	30,4
Reduced heat input (Qr)	kW	3,0	4,2
Nominal heat output (80-60°C) (Pn)	kW	23,0	29,4
Reduced heat output (80-60°C) (Pr)	kW	2,6	3,9
Heat output (50-30°C)	kW	25,0	32,3
Reduced heat output (50-30°C)	kW	3,2	4,4
Useful efficiency at nominal input (80-60°C)	%	96,8	96,2
Useful efficiency at nominal input (50-30°C)	%	105,6	106,2
Useful efficiency at 30% (30°C return)	%	107,4	108,3
Heating circuit working pressure (min-max)	bar	0,5-3,0	0,5-3,0
CH temperature setting range	°C	20-78	20-78
CH maximum working temperature	°C	83	83
Heating expansion vessel capacity	l	10	10
DHW nominal heat input	kW	27,3	34,5
DHW minimum heat input	kW	3,0	4,2
DHW nominal heat output (ΔT 30°C)	kW	26,8	33,4
DHW circuit working pressure (min-max)	bar	0,5-6,0	0,5-6,0
Specific DHW flow ΔT=30K	l/min	16,2	19,5
Qualification of domestic hot water	-	* * *	* * *
DHW temperature range	°C	35-65	35-65
DHW maximum working temperature	°C	65	65
NOx emission class	-	6	6
Casing heat loss with burner on at nominal heat input	%	0.44	0.87
Casing heat loss with burner off	%	0.21	0,19
Chimney heat loss with burner on at nominal heat input	%	2.72	2.33
Air-flue ΔT at nominal heat input	°C	61	60
Flue gas flow at nominal heat input	g/s	12,43	15,81
CO2 at nominal heat input of heating (Natural gas)	%	9	9
CO2 at nominal heat input of heating (Propane)	%	10	10
Power supply voltage/frequency	V/Hz	230/50	230/50
Maximum power consumption	W	116	126
Circulation pump power input	W	86	86
Electric protection rating	IP	IPX4D	IPX4D
Air intake/flue gas vent pipe diameter	mm	80+80 60+60 100/60 125/80	80+80 60+60 100/60 125/80

TECHNICAL SPECIFICATIONS OF CONDENSING BOILERS

Technical specifications	um	Virgo	Virgo	Virgo	Virgo
Model	-	KC 12	KC 24	KC 28	KC 32
Type	-	B23-B23P-B33-C13-C33-C43-C53-C63-C83-C13X-C33X-C43X-C53X-C63X-C83X-C93-C93X	B23-B23P-B33-C13-C33-C43-C53-C63-C83-C13X-C33X-C43X-C53X-C63X-C83X-C93-C93X	B23-B23P-B33-C13-C33-C43-C53-C63-C83-C13X-C33X-C43X-C53X-C63X-C83X-C93-C93X	B23-B23P-B33-C13-C33-C43-C53-C63-C83-C13X-C33X-C43X-C53X-C63X-C83X-C93-C93X
Nominal heat input (Qn)	kW	12,0	23,7	26,4	30,4
Reduced heat input (Qr)	kW	2,0	3,0	3,3	4,2
Nominal heat output (80-60°C) (Pn)	kW	11,7	23,0	25,5	29,4
Reduced heat output (80-60°C) (Pr)	kW	1,8	2,6	3,0	3,9
Heat output (50-30°C)	kW	12,6	25,0	28,0	32,3
Reduced heat output (50-30°C)	kW	2,1	3,2	3,5	4,4
Useful efficiency at nominal input (80-60°C)	%	97,1	96,8	96,7	96,8
Useful efficiency at nominal input (50-30°C)	%	105,1	105,6	106,0	106,2
Useful efficiency at 30% (30°C return)	%	106,0	107,4	107,4	108,3
Heating circuit working pressure (min-max)	bar	0,5-3,0	0,5-3,0	0,5-3,0	0,5-3,0
CH temperature setting range	°C	20-78	20-78	20-78	20-78
CH maximum working temperature	°C	83	83	83	83
Heating expansion vessel capacity	l	10	10	10	10
DHW nominal heat input	kW	18,0	27,3	30,4	34,5
DHW minimum heat input	kW	2,0	3,0	3,3	4,2
DHW nominal heat output (ΔT 30°C)	kW	18,6	27,4	29,2	33,4
DHW circuit working pressure (min-max)	bar	0,5-6,0	0,5-6,0	0,5-6,0	0,5-6,0
Specific DHW flow ΔT=30K	l/min	8,8	13,4	15,5	16,2
Qualification of domestic hot water	-	* *	* *	* *	* *
DHW temperature range	°C	35-57	35-57	35-57	35-57
DHW maximum working temperature	°C	62	62	62	62
NOx emission class	-	6	6	6	6
Casing heat loss with burner on at nominal heat input	%	0,40	0.44	1.04	0,87
Casing heat loss with burner off	%	0,53	0.21	0,20	0,19
Chimney heat loss with burner on at nominal heat input	%	2,50	2.72	2.26	2,33
Air-flue ΔT at nominal heat input	°C	57,9	61	60	60
Flue gas flow at nominal heat input	g/s	8,25	12,43	13,93	15,81
CO2 at nominal heat input of heating (Natural gas)	%	9	9	9	9
CO2 at nominal heat input of heating (Propane)	%	10	10	10	10
Power supply voltage/frequency	V/Hz	230/50	230/50	230/50	230/50
Maximum power consumption	W	107	120	125	129
Circulation pump power input	W	86	86	86	86
Electric protection rating	IP	IPX5D	IPX5D	IPX5D	IPX5D
Air intake/flue gas vent pipe diameter	mm	80+80 60+60 100/60 125/80	80+80 60+60 100/60 125/80	80+80 60+60 100/60 125/80	80+80 60+60 100/60 125/80

TECHNICAL SPECIFICATIONS OF CONDENSING BOILERS

Technical specifications	um	Virgo	Virgo	Virgo	Virgo
Model	-	KR 12	KR 24	KR 28	KR 32
Type	-	B23-B23P-B33-C13-C33-C43-C53-C63-C83-C13X-C33X-C43X-C53X-C63X-C83X-C93-C93X	B23-B23P-B33-C13-C33-C43-C53-C63-C83-C13X-C33X-C43X-C53X-C63X-C83X-C93-C93X	B23-B23P-B33-C13-C33-C43-C53-C63-C83-C13X-C33X-C43X-C53X-C63X-C83X-C93-C93X	B23-B23P-B33-C13-C33-C43-C53-C63-C83-C13X-C33X-C43X-C53X-C63X-C83X-C93-C93X
Nominal heat input (Qn)	kW	12,0	23,7	26,4	30,4
Reduced heat input (Qr)	kW	2,0	3,0	3,3	4,2
Nominal heat output (80-60°C) (Pn)	kW	11,7	23,0	25,5	29,4
Reduced heat output (80-60°C) (Pr)	kW	1,8	2,6	3,0	3,9
Heat output (50-30°C)	kW	12,6	25,0	28,0	32,3
Reduced heat output (50-30°C)	kW	2,1	3,2	3,5	4,4
Useful efficiency at nominal input (80-60°C)	%	97,1	96,8	96,7	96,8
Useful efficiency at nominal input (50-30°C)	%	105,1	105,6	106,0	106,2
Useful efficiency at 30% (30°C return)	%	106,0	107,4	107,4	108,3
Heating circuit working pressure (min-max)	bar	0,5-3,0	0,5-3,0	0,5-3,0	0,5-3,0
CH temperature setting range	°C	20-78	20-78	20-78	20-78
CH maximum working temperature	°C	83	83	83	83
Heating expansion vessel capacity	l	10	10	10	10
DHW nominal heat input	kW	18,0 (*)	27,3 (*)	30,4 (*)	34,5 (*)
DHW minimum heat input	kW	2,0 (*)	3,0 (*)	3,3 (*)	4,2 (*)
DHW temperature range	°C	35-65 (***)	35-65 (***)	35-65 (***)	35-65 (***)
DHW maximum working temperature	°C	65 (***)	65 (***)	65 (***)	65 (***)
NOx emission class	-	6	6	6	6
Casing heat loss with burner on at nominal heat input	%	0,40	0.44	1.04	0,87
Casing heat loss with burner off	%	0,53	0.21	0,20	0,19
Chimney heat loss with burner on at nominal heat input	%	2,50	2.72	2.26	2,33
Air-flue ΔT at nominal heat input	°C	57,9	61	60	60
Flue gas flow at nominal heat input	g/s	8,25	12,43	13,93	15,81
CO2 at nominal heat input of heating (Natural gas)	%	9	9	9	9
CO2 at nominal heat input of heating (Propane)	%	10	10	10	10
Power supply voltage/frequency	V/Hz	230/50	230/50	230/50	230/50
Maximum power consumption	W	107	120	125	129
Circulation pump power input	W	86	86	86	86
Electric protection rating	IP	IPX5D	IPX5D	IPX5D	IPX5D
Air intake/flue gas vent pipe diameter	mm	80+80 60+60 100/60 125/80	80+80 60+60 100/60 125/80	80+80 60+60 100/60 125/80	80+80 60+60 100/60 125/80

(*) with optional hot water storage tank.
(***) with hot water storage tank probe connected.

TECHNICAL SPECIFICATIONS OF CONDENSING BOILERS

Technical specifications	um	Virgo	Virgo	Virgo	Virgo
Model	-	KRB 12	KRB 24	KRB 28	KRB 32
Type	-	B23-B23P-B33-C13-C33-C43-C53-C63-C83-C13X-C33X-C43X-C53X-C63X-C83X-C93-C93X	B23-B23P-B33-C13-C33-C43-C53-C63-C83-C13X-C33X-C43X-C53X-C63X-C83X-C93-C93X	B23-B23P-B33-C13-C33-C43-C53-C63-C83-C13X-C33X-C43X-C53X-C63X-C83X-C93-C93X	B23-B23P-B33-C13-C33-C43-C53-C63-C83-C13X-C33X-C43X-C53X-C63X-C83X-C93-C93X
Nominal heat input (Qn)	kW	12,0	23,7	26,4	30,4
Reduced heat input (Qr)	kW	2,0	3,0	3,3	4,2
Nominal heat output (80-60°C) (Pn)	kW	11,7	23,0	25,5	29,4
Reduced heat output (80-60°C) (Pr)	kW	1,8	2,6	3,0	3,9
Heat output (50-30°C)	kW	12,6	25,0	28,0	32,3
Reduced heat output (50-30°C)	kW	2,1	3,2	3,5	4,4
Useful efficiency at nominal input (80-60°C)	%	97,1	96,8	96,7	96,8
Useful efficiency at nominal input (50-30°C)	%	105,1	105,6	106,0	106,2
Useful efficiency at 30% (30°C return)	%	106,0	107,4	107,4	108,3
Heating circuit working pressure (min-max)	bar	0,5-3,0	0,5-3,0	0,5-3,0	0,5-3,0
CH temperature setting range	°C	20-78	20-78	20-78	20-78
CH maximum working temperature	°C	83	83	83	83
Heating expansion vessel capacity	l	10	10	10	10
DHW nominal heat input	kW	18,0 (*)	27,3 (*)	30,4 (*)	34,5 (*)
DHW minimum heat input	kW	2,0 (*)	3,0 (*)	3,3 (*)	4,2 (*)
DHW temperature range	°C	35-65 (***)	35-65 (***)	35-65 (***)	35-65 (***)
DHW maximum working temperature	°C	65 (***)	65 (***)	65 (***)	65 (***)
NOx emission class	-	6	6	6	6
Casing heat loss with burner on at nominal heat input	%	0,40	0.44	1.04	0,87
Casing heat loss with burner off	%	0,53	0.21	0,20	0,19
Chimney heat loss with burner on at nominal heat input	%	2,50	2.72	2.26	2,33
Air-flue ΔT at nominal heat input	°C	57,9	61	60	60
Flue gas flow at nominal heat input	g/s	8,25	12,43	13,93	15,81
CO2 at nominal heat input of heating (Natural gas)	%	9	9	9	9
CO2 at nominal heat input of heating (Propane)	%	10	10	10	10
Power supply voltage/frequency	V/Hz	230/50	230/50	230/50	230/50
Maximum power consumption	W	81	90	94	106
Circulation pump power input	W	86	86	86	86
Electric protection rating	IP	IPX5D	IPX5D	IPX5D	IPX5D
Air intake/flue gas vent pipe diameter	mm	80+80 60+60 100/60 125/80	80+80 60+60 100/60 125/80	80+80 60+60 100/60 125/80	80+80 60+60 100/60 125/80

(*) with optional hot water storage tank.
(***) with hot water storage tank probe connected.

TECHNICAL SPECIFICATIONS OF CONDENSING BOILERS

Technical specifications	um	Delfis	Delfis	Delfis
Model	-	KC 12	KC 24	KC 28
Type	-	B23-B23P-B33-C13-C33-C43-C53-C63-C83-C13X-C33X-C43X-C53X-C63X-C83X-C93-C93X	B23-B23P-B33-C13-C33-C43-C53-C63-C83-C13X-C33X-C43X-C53X-C63X-C83X-C93-C93X	B23-B23P-B33-C13-C33-C43-C53-C63-C83-C13X-C33X-C43X-C53X-C63X-C83X-C93-C93X
Nominal heat input (Qn)	kW	12,0	23,7	26,4
Reduced heat input (Qr)	kW	2,0	3,0	3,3
Nominal heat output (80-60°C) (Pn)	kW	11,7	22,8	25,5
Reduced heat output (80-60°C) (Pr)	kW	1,8	2,8	3,1
Heat output (50-30°C)	kW	12,6	24,9	28,0
Reduced heat output (50-30°C)	kW	2,1	3,2	3,5
Useful efficiency at nominal input (80-60°C)	%	97,1	96,3	96,7
Useful efficiency at nominal input (50-30°C)	%	105,1	105,1	105,9
Useful efficiency at 30% (30°C return)	%	106,0	107,2	107,5
Heating circuit working pressure (min-max)	bar	0,5-3,0	0,5-3,0	0,5-3,0
CH temperature setting range	°C	20-78	20-78	20-78
CH maximum working temperature	°C	83	83	83
Heating expansion vessel capacity	l	9	9	9
DHW nominal heat input	kW	18,0	27,3	30,4
DHW minimum heat input	kW	2,0	3,0	3,3
DHW nominal heat output (ΔT 30°C)	kW	18,4	27,4	29,2
DHW circuit working pressure (min-max)	bar	0,5-6,0	0,5-6,0	0,5-6,0
Specific DHW flow ΔT=30K	l/min	8,6	13,4	15,0
Qualification of domestic hot water	-	* *	* *	* *
DHW temperature range	°C	35-57	35-57	35-57
DHW maximum working temperature	°C	62	62	62
NOx emission class	-	6	6	6
Casing heat loss with burner on at nominal heat input	%	0,26	1.28	1.11
Casing heat loss with burner off	%	0,55	0,26	0.27
Chimney heat loss with burner on at nominal heat input	%	2,64	2.45	2.19
Air-flue ΔT at nominal heat input	°C	57,9	61	60
Flue gas flow at nominal heat input	g/s	8,25	12,43	13,93
CO2 at nominal heat input of heating (Natural gas)	%	9	9	9
CO2 at nominal heat input of heating (Propane)	%	10	10	10
Power supply voltage/frequency	V/Hz	230/50	230/50	230/50
Maximum power consumption	W	111	120	125
Circulation pump power input	W	86	86	86
Electric protection rating	IP	IPX4D	IPX4D	IPX4D
Air intake/flue gas vent pipe diameter	mm	80+80 60+60 100/60 125/80	80+80 60+60 100/60 125/80	80+80 60+60 100/60 125/80

TECHNICAL SPECIFICATIONS OF CONDENSING BOILERS

Technical specifications	um	Delfis	Delfis	Delfis
Model	-	KR 12	KR 24	KR 28
Type	-	B23-B23P-B33-C13-C33-C43-C53-C63-C83-C13X-C33X-C43X-C53X-C63X-C83X-C93-C93X	B23-B23P-B33-C13-C33-C43-C53-C63-C83-C13X-C33X-C43X-C53X-C63X-C83X-C93-C93X	B23-B23P-B33-C13-C33-C43-C53-C63-C83-C13X-C33X-C43X-C53X-C63X-C83X-C93-C93X
Nominal heat input (Qn)	kW	12,0	23,7	26,4
Reduced heat input (Qr)	kW	2,0	3,0	3,3
Nominal heat output (80-60°C) (Pn)	kW	11,7	22,8	25,5
Reduced heat output (80-60°C) (Pr)	kW	1,8	2,8	3,1
Heat output (50-30°C)	kW	12,6	24,9	28,0
Reduced heat output (50-30°C)	kW	2,1	3,2	3,5
Useful efficiency at nominal input (80-60°C)	%	97,1	96,3	96,7
Useful efficiency at nominal input (50-30°C)	%	105,1	105,1	105,9
Useful efficiency at 30% (30°C return)	%	106,0	107,2	107,5
Heating circuit working pressure (min-max)	bar	0,5-3,0	0,5-3,0	0,5-3,0
CH temperature setting range	°C	20-78	20-78	20-78
CH maximum working temperature	°C	83	83	83
Heating expansion vessel capacity	l	9	9	9
DHW nominal heat input	kW	18,0 (*)	27,3 (*)	30,4 (*)
DHW minimum heat input	kW	2,0 (*)	3,0 (*)	3,3 (*)
DHW temperature range	°C	35-65 (***)	35-65 (***)	35-65 (***)
DHW maximum working temperature	°C	65 (***)	65 (***)	65 (***)
NOx emission class	-	6	6	6
Casing heat loss with burner on at nominal heat input	%	0,26	1.28	1.11
Casing heat loss with burner off	%	0,55	0,26	0.27
Chimney heat loss with burner on at nominal heat input	%	2,64	2.45	2.19
Air-flue ΔT at nominal heat input	°C	57,9	61	60
Flue gas flow at nominal heat input	g/s	8,25	12,43	13,93
CO2 at nominal heat input of heating (Natural gas)	%	9	9	9
CO2 at nominal heat input of heating (Propane)	%	10	10	10
Power supply voltage/frequency	V/Hz	230/50	230/50	230/50
Maximum power consumption	W	111	120	125
Circulation pump power input	W	86	86	86
Electric protection rating	IP	IPX4D	IPX4D	IPX4D
Air intake/flue gas vent pipe diameter	mm	80+80 60+60 100/60 125/80	80+80 60+60 100/60 125/80	80+80 60+60 100/60 125/80

(*) with optional hot water storage tank.
(***) with hot water storage tank probe connected.

TECHNICAL SPECIFICATIONS OF CONDENSING BOILERS

Technical specifications	um	Delfis	Delfis	Delfis
Model	-	KRB 12	KRB 24	KRB 28
Type	-	B23-B23P-B33-C13-C33-C43-C53-C63-C83-C13X-C33X-C43X-C53X-C63X-C83X-C93-C93X	B23-B23P-B33-C13-C33-C43-C53-C63-C83-C13X-C33X-C43X-C53X-C63X-C83X-C93-C93X	B23-B23P-B33-C13-C33-C43-C53-C63-C83-C13X-C33X-C43X-C53X-C63X-C83X-C93-C93X
Nominal heat input (Qn)	kW	12,0	23,7	26,4
Reduced heat input (Qr)	kW	2,0	3,0	3,3
Nominal heat output (80-60°C) (Pn)	kW	11,7	22,8	25,5
Reduced heat output (80-60°C) (Pr)	kW	1,8	2,8	3,1
Heat output (50-30°C)	kW	12,6	24,9	28,0
Reduced heat output (50-30°C)	kW	2,1	3,2	3,5
Useful efficiency at nominal input (80-60°C)	%	97,1	96,3	96,7
Useful efficiency at nominal input (50-30°C)	%	105,1	105,1	105,9
Useful efficiency at 30% (30°C return)	%	106,0	107,2	107,5
Heating circuit working pressure (min-max)	bar	0,5-3,0	0,5-3,0	0,5-3,0
CH temperature setting range	°C	20-78	20-78	20-78
CH maximum working temperature	°C	83	83	83
Heating expansion vessel capacity	l	9	9	9
DHW nominal heat input	kW	18,0 (*)	27,3 (*)	30,4 (*)
DHW minimum heat input	kW	2,0 (*)	3,0 (*)	3,3 (*)
DHW temperature range	°C	35-65 (***)	35-65 (***)	35-65 (***)
DHW maximum working temperature	°C	65 (***)	65 (***)	65 (***)
NOx emission class	-	6	6	6
Casing heat loss with burner on at nominal heat input	%	0,26	1.28	1.11
Casing heat loss with burner off	%	0,55	0,26	0.27
Chimney heat loss with burner on at nominal heat input	%	2,64	2.45	2.19
Air-flue ΔT at nominal heat input	°C	57,9	61	60
Flue gas flow at nominal heat input	g/s	8,25	12,43	13,93
CO2 at nominal heat input of heating (Natural gas)	%	9	9	9
CO2 at nominal heat input of heating (Propane)	%	10	10	10
Power supply voltage/frequency	V/Hz	230/50	230/50	230/50
Maximum power consumption	W	81	90	94
Circulation pump power input	W	86	86	86
Electric protection rating	IP	IPX4D	IPX4D	IPX4D
Air intake/flue gas vent pipe diameter	mm	80+80 60+60 100/60 125/80	80+80 60+60 100/60 125/80	80+80 60+60 100/60 125/80

(*) with optional hot water storage tank.
(***) with hot water storage tank probe connected.

TECHNICAL SPECIFICATIONS OF CONDENSING BOILERS

Technical specifications	um	Leo
Model	-	KC 24
Type	-	B23-B23P-B33-C13-C13X-C33-C33X-C43-C43X-C53-C53X-C63-C63X-C83-C83X
Nominal heat input (Qn)	kW	20,0
Reduced heat input (Qr)	kW	5,0
Nominal heat output (80-60°C) (Pn)	kW	19,4
Reduced heat output (80-60°C) (Pr)	kW	4,8
Heat output (50-30°C)	kW	21,2
Reduced heat output (50-30°C)	kW	5,4
Useful efficiency at nominal input (80-60°C)	%	97,1
Useful efficiency at nominal input (50-30°C)	%	106,1
Useful efficiency at 30% (30°C return)	%	108,1
Heating circuit working pressure (min-max)	bar	0,5-3,0
CH temperature setting range	°C	20-78
CH maximum working temperature	°C	83
Heating expansion vessel capacity	l	9
DHW nominal heat input	kW	24,0
DHW minimum heat input	kW	5,0
DHW nominal heat output (ΔT 30°C)	kW	23,3
DHW circuit working pressure (min-max)	bar	0,5-6,0
Specific DHW flow ΔT=30K	l/min	12,0
Qualification of domestic hot water	-	* *
DHW temperature range	°C	35-57
DHW maximum working temperature	°C	62
NOx emission class	-	6
Casing heat loss with burner on at nominal heat input	%	0,16
Casing heat loss with burner off	%	0,38
Chimney heat loss with burner on at nominal heat input	%	2.79
Air-flue ΔT at nominal heat input	°C	73.3
Flue gas flow at nominal heat input	g/s	11,0
CO2 at nominal heat input of heating (Natural gas)	%	9,0 ± 0,3
CO2 at nominal heat input of heating (Propane)	%	10.0 ± 0.3
Power supply voltage/frequency	V/Hz	230/50
Maximum power consumption	W	133
Circulation pump power input	W	84
Electric protection rating	IP	IPX4D
Air intake/flue gas vent pipe diameter	mm	80+80 60+60 100/60 125/80

TECHNICAL SPECIFICATIONS OF CONDENSING BOILERS

Technical specifications	um	Phoenix	Phoenix	Phoenix	Phoenix
Model	-	KRB 12	KRB 24	KRB 28	KRB 32
Type	-	B23-B23P-B33-C13-C33-C43-C53-C63-C83-C13X-C33X-C43X-C53X-C63X-C83X-C93-C93X	B23-B23P-B33-C13-C33-C43-C53-C63-C83-C13X-C33X-C43X-C53X-C63X-C83X-C93-C93X	B23-B23P-B33-C13-C33-C43-C53-C63-C83-C13X-C33X-C43X-C53X-C63X-C83X-C93-C93X	B23-B23P-B33-C13-C33-C43-C53-C63-C83-C13X-C33X-C43X-C53X-C63X-C83X-C93-C93X
Nominal heat input (Qn)	kW	12,0	23,7	26,4	30,4
Reduced heat input (Qr)	kW	2,0	3,0	3,3	4,2
Nominal heat output (80-60°C) (Pn)	kW	11,6	22,9	25,4	29,4
Reduced heat output (80-60°C) (Pr)	kW	1,8	2,7	3,0	3,9
Heat output (50-30°C)	kW	12,6	24,9	27,9	32,3
Reduced heat output (50-30°C)	kW	2,1	3,22	3,58	4,4
Useful efficiency at nominal input (80-60°C)	%	97,1	96,7	96,4	96,8
Useful efficiency at nominal input (50-30°C)	%	105,1	105,1	105,5	106,2
Useful efficiency at 30% (30°C return)	%	106,0	106,5	107,0	108,3
Heating circuit working pressure (min-max)	bar	0,5-3,0	0,5-3,0	0,5-3,0	0,5-3,0
CH temperature setting range	°C	20-78	20-78	20-78	20-78
CH maximum working temperature	°C	83	83	83	83
Heating expansion vessel capacity	l	10	10	10	10
DHW expansion vessel capacity	l	5	5	5	5
DHW nominal heat input	kW	18,0	27,3	30,4	34,5
DHW minimum heat input	kW	2,0	3,0	3,3	4,2
DHW nominal heat output (ΔT 30°C)	kW	17,5	26,8	29,3	33,4
DHW circuit working pressure (min-max)	bar	0,5-6,0	0,5-6,0	0,5-6,0	0,5-6,0
Specific DHW flow ΔT=30K	l/min	19,5	22	22,5	23,4
Qualification of domestic hot water	-	* * *	* * *	* * *	* * *
DHW temperature range	°C	35-65	35-65	35-65	35-65
DHW maximum working temperature	°C	65	65	65	65
NOx emission class	-	6	6	6	6
Casing heat loss with burner on at nominal heat input	%	0,40	0,61	1,13	0,87
Casing heat loss with burner off	%	0,53	0,21	0,2	0,19
Chimney heat loss with burner on at nominal heat input	%	2,50	2,69	2,47	2,33
Air-flue ΔT at nominal heat input	°C	57,9	61	60	60
Flue gas flow at nominal heat input	g/s	8,25	12,43	13,93	15,81
CO2 at nominal heat input of heating (Natural gas)	%	9	9	9	9
CO2 at nominal heat input of heating (Propane)	%	10	10	10	10
Power supply voltage/frequency	V/Hz	230/50	230/50	230/50	230/50
Maximum power consumption	W	107	115	117	126
Maximum power absorption - version V	W	283	292	294	302
Maximum power absorption - version Z	W	387	395	398	406
Circulation pump power input	W	73	73	73	73
Power absorption of circulation pumps in the V version	W	245	245	245	245
Power absorption of circulation pumps in the Z version	W	343	343	343	343
Electric protection rating	IP	IPX5D	IPX5D	IPX5D	IPX5D
Air intake/flue gas vent pipe diameter	mm	80+80 60+60 100/60 125/80	80+80 60+60 100/60 125/80	80+80 60+60 100/60 125/80	80+80 60+60 100/60 125/80

TECHNICAL SPECIFICATIONS OF CONDENSING BOILERS

Technical specifications	um	Pegasus Solar	Pegasus Solar	Pegasus Solar	Pegasus Solar
Model	-	KRBS 12	KRBS 24	KRBS 28	KRBS 32
Type	-	B23-B23P-B33-C13-C33-C43-C53-C63-C83-C13X-C33X-C43X-C53X-C63X-C83X-C93-C93X	B23-B23P-B33-C13-C33-C43-C53-C63-C83-C13X-C33X-C43X-C53X-C63X-C83X-C93-C93X	B23-B23P-B33-C13-C33-C43-C53-C63-C83-C13X-C33X-C43X-C53X-C63X-C83X-C93-C93X	B23-B23P-B33-C13-C33-C43-C53-C63-C83-C13X-C33X-C43X-C53X-C63X-C83X-C93-C93X
Nominal heat input (Qn)	kW	12,0	23,7	26,4	30,4
Reduced heat input (Qr)	kW	2,0	3,0	3,3	4,2
Nominal heat output (80-60°C) (Pn)	kW	11,6	22,9	25,4	29,4
Reduced heat output (80-60°C) (Pr)	kW	1,8	2,7	3,0	3,9
Heat output (50-30°C)	kW	12,6	24,9	27,9	32,3
Reduced heat output (50-30°C)	kW	2,1	3,22	3,58	4,4
Useful efficiency at nominal input (80-60°C)	%	97,1	96,7	96,4	96,8
Useful efficiency at nominal input (50-30°C)	%	105,1	105,1	105,5	106,2
Useful efficiency at 30% (30°C return)	%	106,0	106,5	107,0	108,3
Heating circuit working pressure (min-max)	bar	0,5-3,0	0,5-3,0	0,5-3,0	0,5-3,0
CH temperature setting range	°C	20-78	20-78	20-78	20-78
CH maximum working temperature	°C	83	83	83	83
Heating expansion vessel capacity	l	10	10	10	10
DHW expansion vessel capacity	l	12	12	12	12
Solar expansion vessel capacity	l	18	18	18	18
DHW nominal heat input	kW	18,0	27,3	30,4	34,5
DHW minimum heat input	kW	2,0	3,0	3,3	4,2
DHW nominal heat output (ΔT 30°C)	kW	17,5	26,8	29,3	33,4
DHW circuit working pressure (min-max)	bar	0,5-6,0	0,5-6,0	0,5-6,0	0,5-6,0
Specific DHW flow ΔT=30K	l/min	23,6	23,6	25,3	26,3
Qualification of domestic hot water	-	* * *	* * *	* * *	* * *
DHW temperature range	°C	35-65	35-65	35-65	35-65
DHW maximum working temperature	°C	65	65	65	65
NOx emission class	-	6	6	6	6
Casing heat loss with burner on at nominal heat input	%	0,40	0,61	1,13	0,87
Casing heat loss with burner off	%	0,53	0,21	0,20	0,19
Chimney heat loss with burner on at nominal heat input	%	2,50	2,69	2,47	2,33
Air-flue ΔT at nominal heat input	°C	57,9	61	60	60
Flue gas flow at nominal heat input	g/s	8,25	12,43	13,93	15,81
CO2 at nominal heat input of heating (Natural gas)	%	9	9	9	9
CO2 at nominal heat input of heating (Propane)	%	10	10	10	10
Power supply voltage/frequency	V/Hz	230/50	230/50	230/50	230/50
Maximum power consumption	W	122	130	132	140
Maximum power absorption - version V	W	299	308	310	318
Maximum power absorption - version Z	W	403	411	414	318
Circulation pump power input	W	35	43	46	49
Power absorption of circulation pumps in the V version	W	207	215	217	220
Power absorption of circulation pumps in the Z version	W	306	313	316	319
Electric protection rating	IP	IPX5D	IPX5D	IPX5D	IPX5D
Air intake/flue gas vent pipe diameter	mm	80+80 60+60 100/60 125/80	80+80 60+60 100/60 125/80	80+80 60+60 100/60 125/80	80+80 60+60 100/60 125/80

TECHNICAL SPECIFICATIONS OF CONDENSING BOILERS

Technical specifications	um	Pegasus Solar Compact	Pegasus Solar Compact
Model	-	KBS 24	KBS 32
Type	-	B23-B23P-B33-C13-C33-C43-C53-C63-C83-C13X-C33X-C43X-C53X-C63X-C83X-C93-C93X	B23-B23P-B33-C13-C33-C43-C53-C63-C83-C13X-C33X-C43X-C53X-C63X-C83X-C93-C93X
Nominal heat input (Qn)	kW	23,7	30,4
Reduced heat input (Qr)	kW	3,0	4,2
Nominal heat output (80-60°C) (Pn)	kW	22,9	29,4
Reduced heat output (80-60°C) (Pr)	kW	2,7	3,9
Heat output (50-30°C)	kW	24,9	32,3
Reduced heat output (50-30°C)	kW	3,22	4,4
Useful efficiency at nominal input (80-60°C)	%	96,7	96,8
Useful efficiency at nominal input (50-30°C)	%	105,1	106,2
Useful efficiency at 30% (30°C return)	%	106,5	108,3
Heating circuit working pressure (min-max)	bar	0,5-3,0	0,5-3,0
CH temperature setting range	°C	20-78	20-78
CH maximum working temperature	°C	83	83
Heating expansion vessel capacity	l	10	10
DHW expansion vessel capacity	l	12	12
Solar expansion vessel capacity	l	12	12
DHW nominal heat input	kW	27,3	34,5
DHW minimum heat input	kW	3,0	4,2
DHW nominal heat output (ΔT 30°C)	kW	27,4	33,4
DHW circuit working pressure (min-max)	bar	0,5-6,0	0,5-6,0
Specific DHW flow ΔT=30K	l/min	13,4	16,2
Qualification of domestic hot water	-	* * *	* * *
DHW temperature range	°C	35-65	35-65
DHW maximum working temperature	°C	65	65
NOx emission class	-	6	6
Casing heat loss with burner on at nominal heat input	%	0,61	0,87
Casing heat loss with burner off	%	0,21	0,19
Chimney heat loss with burner on at nominal heat input	%	2,69	2,33
Air-flue ΔT at nominal heat input	°C	61	60
Flue gas flow at nominal heat input	g/s	12,43	15,81
CO2 at nominal heat input of heating (Natural gas)	%	9	9
CO2 at nominal heat input of heating (Propane)	%	10	10
Power supply voltage/frequency	V/Hz	230/50	230/50
Maximum power consumption	W	158	169
Maximum power absorption - version V	W	335	346
Maximum power absorption - version Z	W	439	449
Circulation pump power input	W	73	73
Power absorption of circulation pumps in the V version	W	245	245
Power absorption of circulation pumps in the Z version	W	344	343
Electric protection rating	IP	IPX5D	IPX5D
Air intake/flue gas vent pipe diameter	mm	80+80 60+60 100/60 125/80	80+80 60+60 100/60 125/80

(**) with comfort function disabled.

STANDARD BOILERS

WALL-HUNG BOILERS

FLOOR STANDING BOILERS WITH GAS-FIRED ATMOSPHERIC BURNER

TECHNICAL SPECIFICATIONS OF STANDARD BOILERS

ORION CTFS

WALL-HUNG GAS BOILER WITH SEALED CHAMBER AND FORCED DRAUGHT WITH INSTANT DHW PRODUCTION

Available in the following models:

24 28 32

- **Sanitary comfort function: ★★★**
- **Double filling system: automatic and manual**
- **Multifunction relay for connection to systems with zone valves or to solar plant or to remote alarm signal**
- **Management of one heating zone with ambient temperature probe and two zones with zone kit**
- **Controls to manage two different types of solar thermal systems fitted as standard**
- 3-speed circulation pump with built-in air purging device
- Mono-thermal primary heat exchanger
- Programmable parameters to adapt the boiler to the installation and alerts history
- Heating expansion vessel - 7 litres
- Automatic by-pass
- Installation flexibility thanks to IPX5D electrical protection degree

TOUCH SCREEN INTERFACE

- *Day/night temperature level selection*
- *Weekly programming*
- *Timer and ambient temperature setting*
- *DHW "comfort" function enabling*

Model	Gas type	Code	Heat input		L x H x D	Gross weight
			Nominal (Qn) kW	Nominal DHW kW	mm	kg
CTFS 24	NATURAL GAS	COBXX2CA24	25,5	25,5	420x750x315	38,50
	LPG	COBXX3CA24				
CTFS 28	NATURAL GAS	COBXX2CA28	30,5	30,5	420x750x315	39,00
	LPG	COBXX3CA28				
CTFS 32	NATURAL GAS	COBXX2CA32	33,0	33,0	420x750x315	39,50
	LPG	COBXX3CA32				

DIMENSIONS AND CONNECTION CENTRE DISTANCES

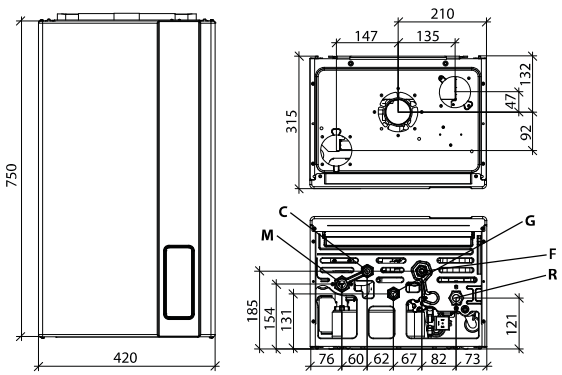

M	CH system flow (3/4")		
C	DHW outlet (1\2")	**F**	Cold water inlet (1/2")
G	Gas inlet (1/2")	**R**	CH system return (3/4")

Technical specifications	um	CTFS 24	CTFS 28	CTFS 32
Nominal heat input (Qn)	kW	25,5	30,5	33,0
Nominal heat output (80-60°C) (Pn)	kW	23,7	28,6	30,8
Reduced heat input (Qr)	kW	12,5	13,5	16,0
Useful efficiency at nominal input (80-60°C)	%	93,0	93,7	93,4
Useful efficiency at 30% (30°C return)	%	90,2	90,6	91,0
Heating expansion vessel capacity	l	7	7	7
DHW nominal heat input	kW	25,5	30,5	33,0
Specific DHW flow ΔT=30K	l/min	11,6	14,2	15,1
NOx emission class	-	3	3	3
Electric protection rating	IP	X5D	X5D	X5D

For other technical specifications, see from page 114 - Maximum length of flue gas venting, see page 166

Item	Description	Code
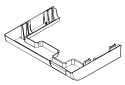	Pipes and taps cover	0COPETUB03
	Remote control, ErP V class (118x85x32 mm)	0CREMOTO04
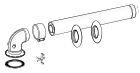	Coaxial kit D60/100 L=1m (for boiler TFS)	0KITCONC00
	Flow - return cold water 90° taps kit	0KITIDBA11
	Tap kit with filter KC-KRB-CT-RBT	0KITRUBI05
	Kit for connection to solar plant	0KITSOLC07
	Electric kit for complex solar plant management	0KITSOLC08

Item	Description	Code
	Electrical kit for zone management with external probe	0KITZONE05
	Temperature probe for solar plants	PSPTMILL00
	Coaxial air intake/flue gas venting connection for B22 type installations	0ATTCOVE04
	Coaxial flue kit	0SDOPPIA13
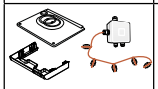	Cover and anti-freeze protection kit	0KITCOPE03
	External protection kit for standard boilers	0KITCOPE04

For other accessories, see from page 165

ORION RBTFS

WALL-HUNG GAS BOILER WITH SEALED CHAMBER AND FORCED DRAUGHT, CH ONLY, WITH INTEGRATED 3-WAY VALVE
CONNECTION TO AN EXTERNAL HOT WATER STORAGE TANK (OPTIONAL)

- **Integrated 3-way deviating valve**
- **Management of one heating zone with ambient temperature probe and two zones with zone kit**
- **Standard management of one type of solar thermal system**
- **External hot water storage tank heating setting (optional)**
- **Multifunction relay for connection to systems with zone valves or to solar plant or to remote alarm signal**
- Mono-thermal primary heat exchanger
- Programmable parameters to adapt the boiler to the installation and alerts history
- Heating expansion vessel - 7 litres
- Automatic by-pass
- 3-speed circulation pump with built-in air purging device
- Installation flexibility thanks to IPX5D electrical protection degree

TOUCH SCREEN INTERFACE

- *Day/night temperature level selection*
- *Weekly programming*
- *Timer and ambient temperature setting*
- *Heater DHW "comfort" function enabling*

Available in the following models:

24 28 32

Model	Gas type	Code	Heat input	L x H x D	Gross weight
			Nominal (Qn) kW	mm	kg
RBTFS 24	NATURAL GAS	COBXX2RF24	25,5	420x750x315	35,50
	LPG	COBXX3RF24			
RBTFS 28	NATURAL GAS	COBXX2RF28	30,5	420x750x315	36,50
	LPG	COBXX3RF28			
RBTFS 32	NATURAL GAS	COBXX2RF32	33,0	420x750x315	37,00
	LPG	COBXX3RF32			

DIMENSIONS AND CONNECTION CENTRE DISTANCES

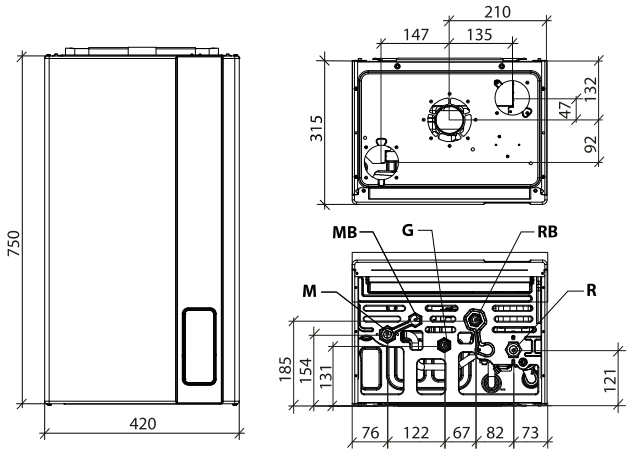

M	CH system flow (3/4")	**RB**	Secondary return from hot water storage tank (1/2")
MB	Secondary flow to hot water storage tank (1/2")		
G	Gas inlet (1/2")	**R**	CH system return (3/4")

Technical specifications	um	RBTFS 24	RBTFS 28	RBTFS 32
Nominal heat input (Qn)	kW	25,5	30,5	33,0
Nominal heat output (80-60°C) (Pn)	kW	23,7	28,6	30,8
Reduced heat input (Qr)	kW	12,5	13,5	16,0
Useful efficiency at nominal input (80-60°C)	%	93,0	93,7	93,4
Useful efficiency at 30% (30°C return)	%	90,2	90,6	91,0
Heating expansion vessel capacity	l	7	7	7
NOx emission class	-	3	3	3
Electric protection rating	IP	X5D	X5D	X5D

For other technical specifications, see from page 115 - Maximum length of flue gas venting, see page 166

Item	Description	Code
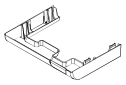	Pipes and taps cover	0COPETUB03
	Remote control, ErP V class (118x85x32 mm)	0CREMOTO04
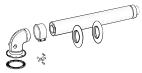	Coaxial kit D60/100 L=1m (for boiler TFS)	0KITCONC00
	Flow - return cold water 90° taps kit	0KITIDBA11
	Tap kit with filter KC-KRB-CT-RBT	0KITRUBI05
	Electric kit for complex solar plant management	0KITSOLC08
	Electrical kit for zone management with external probe	0KITZONE05
	Temperature probe for solar plants	PSPTMILL00

Item	Description	Code
	Cover and anti-freeze protection kit	0KITCOPE03
	External protection kit for standard boilers	0KITCOPE04
	Coaxial air intake/flue gas venting connection for B22 type installations	0ATTCOVE04
	Coaxial flue kit	0SDOPPIA13

For other accessories, see from page 165

Accessories supplied as standard

Item	Description
	hot water storage tank temperature probe 3m

ORION RTFS

WALL-HUNG GAS BOILER WITH SEALED CHAMBER AND FORCED DRAUGHT, CH ONLY
CONNECTION TO AN EXTERNAL HOT WATER STORAGE TANK (OPTIONAL) WITH EXTERNAL 3-WAY VALVE (OPTIONAL)

Available in the following models:

24 28 32

- **Management of one heating zone with ambient temperature probe and two zones with zone kit**
- **Standard management of one type of solar thermal system**
- **External hot water storage tank heating setting (optional)**
- **Multifunction relay for connection to systems with zone valves or to solar plant or to remote alarm signal**
- Mono-thermal primary heat exchanger
- Programmable parameters to adapt the boiler to the installation and alerts history
- Heating expansion vessel - 7 litres
- Automatic by-pass
- 3-speed circulation pump with built-in air purging device
- Installation flexibility thanks to IPX5D electrical protection degree

TOUCH SCREEN INTERFACE

- *Day/night temperature level selection*
- *Weekly programming*
- *Timer and ambient temperature setting*
- *Heater DHW "comfort" function enabling*

Model	Gas type	Code	Heat input	L x H x D	Gross weight
			Nominal (Qn) kW	mm	kg
RTFS 24	NATURAL GAS	COBXX2RA24	25,5	420x750x315	35,50
	LPG	COBXX3RA24			
RTFS 28	NATURAL GAS	COBXX2RA28	30,5	420x750x315	36,50
	LPG	COBXX3RA28			
RTFS 32	NATURAL GAS	COBXX2RA32	33,0	420x750x315	37,00
	LPG	COBXX3RA32			

DIMENSIONS AND CONNECTION CENTRE DISTANCES

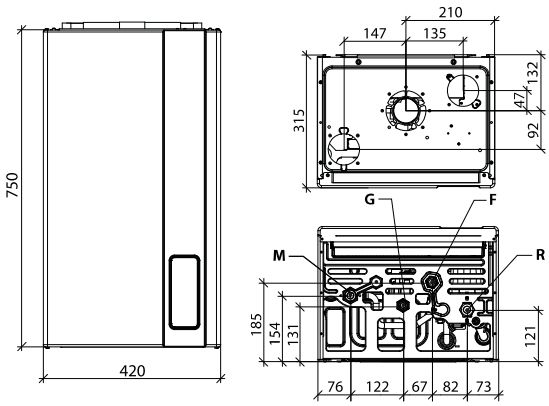

M	CH system flow (3/4")	**F**	Cold water inlet (1/2")
G	Gas inlet (1/2")	**R**	CH system return (3/4")

Technical specifications	um	RTFS 24	RTFS 28	RTFS 32
Nominal heat input (Qn)	kW	25,5	30,5	33,0
Nominal heat output (80-60°C) (Pn)	kW	23,7	28,6	30,8
Reduced heat input (Qr)	kW	12,5	13,5	16,0
Useful efficiency at nominal input (80-60°C)	%	93,0	93,7	93,4
Useful efficiency at 30% (30°C return)	%	90,2	90,6	91,0
Heating expansion vessel capacity	l	7	7	7
NOx emission class	-	3	3	3
Electric protection rating	IP	X5D	X5D	X5D

For other technical specifications, see from page 116 - Maximum length of flue gas venting, see page 166

Item	Description	Code
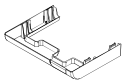	Pipes and taps cover	0COPETUB03
	Remote control, ErP V class (118x85x32 mm)	0CREMOTO04
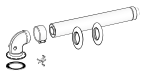	Coaxial kit D60/100 L=1m (for boiler TFS)	0KITCONC00
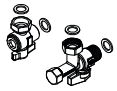	Tap kit with filter KR-KB-RT	0KITRUBI04
	Electric kit for complex solar plant management	0KITSOLC08
	Electrical kit for zone management with external probe	0KITZONE05

Item	Description	Code
	Temperature probe for solar plants	PSPTMILL00
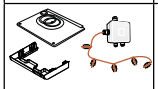	Cover and anti-freeze protection kit	0KITCOPE03
	External protection kit for standard boilers	0KITCOPE04
	Coaxial air intake/flue gas venting connection for B22 type installations	0ATTCOVE04
	Coaxial flue kit	0SDOPPIA13

For other accessories, see from page 165

VIRGO CTFS

WALL-HUNG GAS BOILER WITH SEALED CHAMBER AND FORCED DRAUGHT WITH INSTANT DHW PRODUCTION

- **Controls to manage two different types of solar thermal systems fitted as standard**
- **Thermoregulation with external probe (optional)**
- **Stainless steel 26-plate DHW heat exchanger**
- **Multifunction relay for connection to systems with zone valves or to solar plant or to remote alarm signal**
- Mono-thermal primary heat exchanger
- Programmable parameters to adapt the boiler to the installation and alerts history
- Heating expansion vessel - 7 litres
- Automatic by-pass
- Installation flexibility thanks to IPX5D electrical protection degree
- 3-speed circulation pump with built-in air purging device

TOUCH SCREEN INTERFACE

- *DHW and heating temperature setting*
- *Operating mode setting*
- *Solar thermal systems status display*

Available in the following models:

24 28 32

Model	Gas type	Code	Heat input		L x H x D	Gross weight
			Nominal (Qn) kW	Nominal DHW kW	mm	kg
CTFS 24	NATURAL GAS	CVNXX2CA24	25,5	25,5	420x750x315	37,50
	LPG	CVNXX3CA24				
CTFS 28	NATURAL GAS	CVNXX2CA28	30,5	30,5	420x750x315	38,00
	LPG	CVNXX3CA28				
CTFS 32	NATURAL GAS	CVNXX2CA32	33,0	33,0	420x750x315	38,50
	LPG	CVNXX3CA32				

DIMENSIONS AND CONNECTION CENTRE DISTANCES

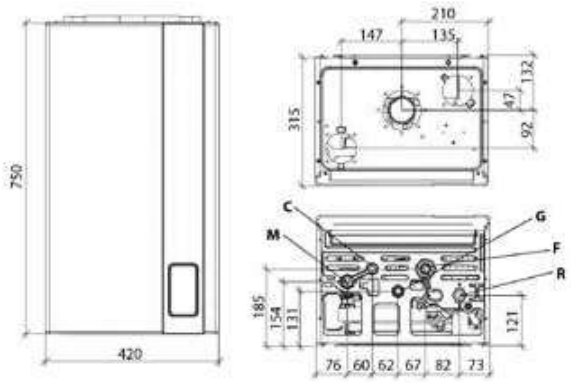

M	CH system flow (3/4")		
C	DHW outlet (1\2")	**F**	Cold water inlet (1/2")
G	Gas inlet (1/2")	**R**	CH system return (3/4")

Technical specifications	um	CTFS 24	CTFS 28	CTFS 32
Nominal heat input (Qn)	kW	25,5	30,5	33,0
Nominal heat output (80-60°C) (Pn)	kW	23,7	28,6	30,8
Reduced heat input (Qr)	kW	12,5	13,5	16,0
Useful efficiency at nominal input (80-60°C)	%	93,0	93,7	93,4
Useful efficiency at 30% (30°C return)	%	90,2	90,6	91,0
Heating expansion vessel capacity	l	7	7	7
DHW nominal heat input	kW	25,5	30,5	33,0
Specific DHW flow ΔT=30K	l/min	11,6	14,2	15,1
NOx emission class	-	3	3	3
Electric protection rating	IP	X5D	X5D	X5D

For other technical specifications, see from page 117 - Maximum length of flue gas venting, see page 166

Item	Description	Code
	Pipes and taps cover	0COPETUB03
	Remote control, ErP V class (118x85x32 mm)	0CREMOTO04
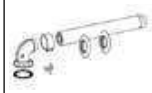	Coaxial kit D60/100 L=1m (for boiler TFS)	0KITCONC00
	Flow - return cold water 90° taps kit	0KITIDBA11
	Tap kit with filter KC-KRB-CT-RBT	0KITRUBI05
	Electrical kit for zone management with external probe	0KITZONE05
	Temperature probe for solar plants	PSPTMILL00

Item	Description	Code
	Coaxial flue kit	0SDOPPIA13
	Kit for connection to solar plant	0KITSOLC07
	Electric kit for complex solar plant management	0KITSOLC08
	Cover and anti-freeze protection kit	0KITCOPE03
	External protection kit for standard boilers	0KITCOPE04
	Coaxial air intake/flue gas venting connection for B22 type installations	0ATTCOVE04

For other accessories, see from page 165

VIRGO CTN

WALL-HUNG GAS BOILER WITH OPEN CHAMBER AND NATURAL DRAUGHT WITH INSTANT DHW PRODUCTION

- **Controls to manage two different types of solar thermal systems fitted as standard**
- **Thermoregulation with external probe (optional)**
- **Stainless steel 26-plate DHW heat exchanger**
- **Multifunction relay for connection to systems with zone valves or to solar plant or to remote alarm signal**
- Mono-thermal primary heat exchanger
- Programmable parameters to adapt the boiler to the installation and alerts history
- Heating expansion vessel - 7 litres
- Automatic by-pass
- 3-speed circulation pump with built-in air purging device
- Installation flexibility thanks to IPX5D electrical protection degree

TOUCH SCREEN INTERFACE

- *DHW and heating temperature setting*
- *Operating mode setting*
- *Solar thermal systems status display*

Available in the following models:

24 28

Model	Gas type	Code	Heat input		L x H x D	Gross weight
			Nominal (Qn) kW	Nominal DHW kW	mm	kg
CTN 24	NATURAL GAS	CVNXX2CC24	25,5	25,5	420x750x315	36,00
	LPG	CVNXX3CC24				
CTN 28	NATURAL GAS	CVNXX2CC28	30,5	30,5	420x750x315	36,50
	LPG	CVNXX3CC28				

DIMENSIONS AND CONNECTION CENTRE DISTANCES

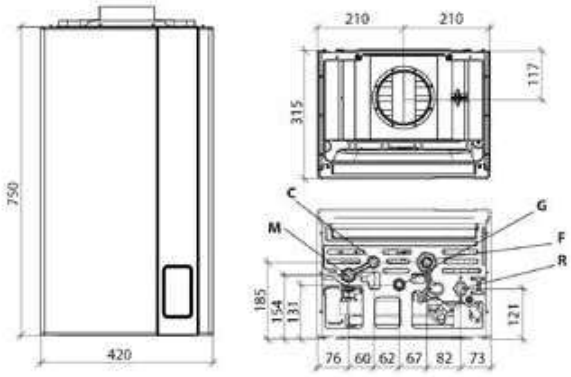

M	CH system flow (3/4")		
C	DHW outlet (1\2")	**F**	Cold water inlet (1/2")
G	Gas inlet (1/2")	**R**	CH system return (3/4")

Technical specifications	um	CTN 24	CTN 28
Nominal heat input (Qn)	kW	25,5	30,5
Nominal heat output (80-60°C) (Pn)	kW	23,1	27,4
Reduced heat input (Qr)	kW	10,0	12,5
Useful efficiency at nominal input (80-60°C)	%	90,6	90,0
Useful efficiency at 30% (30°C return)	%	89,4	87,8
Heating expansion vessel capacity	l	7	7
DHW nominal heat input	kW	25,5	30,5
Specific DHW flow ΔT=30K	l/min	11,2	13,5
NOx emission class	-	2	2
Electric protection rating	IP	X5D	X5D

For other technical specifications, see from page 118 - Maximum length of flue gas venting, see page 166

Item	Description	Code
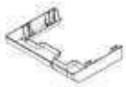	Pipes and taps cover	0COPETUB03
	Remote control, ErP V class (118x85x32 mm)	0CREMOTO04
	Flow - return cold water 90° taps kit	0KITIDBA11
	Tap kit with filter KC-KRB-CT-RBT	0KITRUBI05

Item	Description	Code
	Electric kit for complex solar plant management	0KITSOLC08
	Electrical kit for zone management with external probe	0KITZONE05
	Temperature probe for solar plants	PSPTMILL00

For other accessories, see from page 165

VIRGO RBTFS

WALL-HUNG GAS BOILER WITH SEALED CHAMBER AND FORCED DRAUGHT, CH ONLY, WITH INTEGRATED 3-WAY VALVE
CONNECTION TO AN EXTERNAL HOT WATER STORAGE TANK (OPTIONAL)

- **Controls to manage two different types of solar thermal systems fitted as standard**
- **Thermoregulation with external probe (optional)**
- **Multifunction relay for connection to systems with zone valves or to solar plant or to remote alarm signal**
- **Integrated 3-way deviating valve**
- Mono-thermal primary heat exchanger
- Programmable parameters to adapt the boiler to the installation and alerts history
- Heating expansion vessel - 7 litres
- Automatic by-pass
- 3-speed circulation pump with built-in air purging device
- Installation flexibility thanks to IPX5D electrical protection degree

TOUCH SCREEN INTERFACE

- *DHW and heating temperature setting*
- *Operating mode setting*
- *Solar thermal systems status display*

Available in the following models:

24 28 32

Model	Gas type	Code	Heat input	L x H x D	Gross weight
			Nominal (Qn) kW	mm	kg
RBTFS 24	NATURAL GAS	CVNXX2RF24	25,5	420x750x315	35,50
	LPG	CVNXX3RF24			
RBTFS 28	NATURAL GAS	CVNXX2RF28	30,5	420x750x315	36,50
	LPG	CVNXX3RF28			
RBTFS 32	NATURAL GAS	CVNXX2RF32	33,0	420x750x315	37,00
	LPG	CVNXX3RF32			

DIMENSIONS AND CONNECTION CENTRE DISTANCES

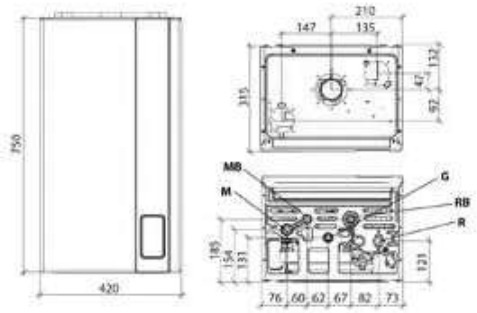

M	CH system flow (3/4")	**RB**	Secondary return from hot water storage tank (1/2")
MB	Secondary flow to hot water storage tank (1/2")		
G	Gas inlet (1/2")	**R**	CH system return (3/4")

Technical specifications	um	RBTFS 24	RBTFS 28	RBTFS 32
Nominal heat input (Qn)	kW	25,5	30,5	33,0
Nominal heat output (80-60°C) (Pn)	kW	23,7	28,6	30,8
Reduced heat input (Qr)	kW	12,5	13,5	16,0
Useful efficiency at nominal input (80-60°C)	%	93,0	93,7	93,4
Useful efficiency at 30% (30°C return)	%	90,2	90,6	91,0
Heating expansion vessel capacity	l	7	7	7
NOx emission class	-	3	3	3
Electric protection rating	IP	X5D	X5D	X5D

For other technical specifications, see from page 119 - Maximum length of flue gas venting, see page 166

Item	Description	Code
	Pipes and taps cover	0COPETUB03
	Remote control, ErP V class (118x85x32 mm)	0CREMOTO04
	Coaxial kit D60/100 L=1m (for boiler TFS)	0KITCONC00
	Coaxial flue kit	0SDOPPIA13
	Flow - return cold water 90° taps kit	0KITIDBA11
	Tap kit with filter KC-KRB-CT-RBT	0KITRUBI05
	Electric kit for complex solar plant management	0KITSOLC08
	Electrical kit for zone management with external probe	0KITZONE05

Item	Description	Code
	Temperature probe for solar plants	PSPTMILL00
	Cover and anti-freeze protection kit	0KITCOPE03
	External protection kit for standard boilers	0KITCOPE04
	Coaxial air intake/flue gas venting connection for B22 type installations	0ATTCOVE04

For other accessories, see from page 165

Accessories supplied as standard

Item	Description
	hot water storage tank temperature probe 3m

VIRGO RBTN

WALL-HUNG GAS BOILER WITH OPEN CHAMBER AND NATURAL DRAUGHT, CH ONLY, WITH INTEGRATED 3-WAY VALVE CONNECTION
CONNECTION TO AN EXTERNAL HOT WATER STORAGE TANK (OPTIONAL)

- **Controls to manage two different types of solar thermal systems fitted as standard**
- **Thermoregulation with external probe (optional)**
- **Multifunction relay for connection to systems with zone valves or to solar plant or to remote alarm signal**
- **Integrated 3-way deviating valve**
- Mono-thermal primary heat exchanger
- Programmable parameters to adapt the boiler to the installation and alerts history
- Heating expansion vessel - 7 litres
- Automatic by-pass
- 3-speed circulation pump with built-in air purging device
- Installation flexibility thanks to IPX5D electrical protection degree

TOUCH SCREEN INTERFACE

- *DHW and heating temperature setting*
- *Operating mode setting*
- *Solar thermal systems status display*

Available in the following models:

24 28

Model	Gas type	Code	Heat input	L x H x D	Gross weight
			Nominal (Qn) kW	mm	kg
RBTN 24	NATURAL GAS	CVNXX2RH24	25,5	420x750x315	34,50
	LPG	CVNXX3RH24			
RBTN 28	NATURAL GAS	CVNXX2RH28	30,5	420x750x315	35,00
	LPG	CVNXX3RH28			

DIMENSIONS AND CONNECTION CENTRE DISTANCES

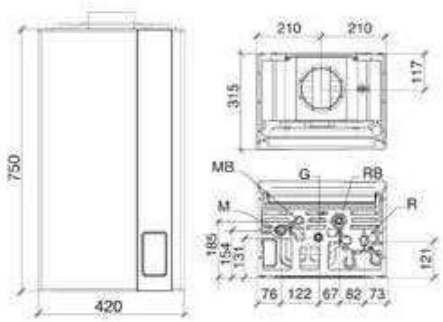

M	CH system flow (3/4")	**RB**	Secondary return from hot water storage tank (1/2")
MB	Secondary flow to hot water storage tank (1/2")		
G	Gas inlet (1/2")	**R**	CH system return (3/4")

Technical specifications	um	RBTN 24	RBTN 28
Nominal heat input (Qn)	kW	25,5	30,5
Nominal heat output (80-60°C) (Pn)	kW	23,1	27,4
Reduced heat input (Qr)	kW	10,0	12,5
Useful efficiency at nominal input (80-60°C)	%	90,6	90,0
Useful efficiency at 30% (30°C return)	%	89,4	87,8
Heating expansion vessel capacity	l	7	7
NOx emission class	-	2	2
Electric protection rating	IP	X5D	X5D

For other technical specifications, see from page 120 - Maximum length of flue gas venting, see page 166

Item	Description	Code
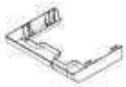	Pipes and taps cover	0COPETUB03
	Remote control, ErP V class (118x85x32 mm)	0CREMOTO04
	Flow - return cold water 90° taps kit	0KITIDBA11
	Tap kit with filter KR-KB-RT	0KITRUBI04
	Electric kit for complex solar plant management	0KITSOLC08

Item	Description	Code
	Electrical kit for zone management with external probe	0KITZONE05
	Temperature probe for solar plants	PSPTMILL00

For other accessories, see from page 165

Accessories supplied as standard

Item	Description
	hot water storage tank temperature probe 3m

VIRGO RTFS

WALL-HUNG GAS BOILER WITH SEALED CHAMBER AND FORCED DRAUGHT, CH ONLY
CONNECTION TO AN EXTERNAL HOT WATER STORAGE TANK (OPTIONAL) WITH EXTERNAL 3-WAY VALVE (OPTIONAL)

- **Controls to manage two different types of solar thermal systems fitted as standard**
- **Thermoregulation with external probe (optional)**
- **Multifunction relay for connection to systems with zone valves or to solar plant or to remote alarm signal**
- Installation flexibility thanks to IPX5D electrical protection degree
- 3-speed circulation pump with built-in air purging device
- Mono-thermal primary heat exchanger
- Programmable parameters to adapt the boiler to the installation and alerts history
- Heating expansion vessel - 7 litres
- Automatic by-pass

TOUCH SCREEN INTERFACE

- *DHW and heating temperature setting*
- *Operating mode setting*
- *Solar thermal systems status display*

Available in the following models:

24 28 32

Model	Gas type	Code	Heat input	L x H x D	Gross weight
			Nominal (Qn) kW	mm	kg
RTFS 24	NATURAL GAS	CVNXX2RA24	25,5	420x750x315	35,50
	LPG	CVNXX3RA24			
RTFS 28	NATURAL GAS	CVNXX2RA28	30,5	420x750x315	36,50
	LPG	CVNXX3RA28			
RTFS 32	NATURAL GAS	CVNXX2RA32	33,0	420x750x315	37,00
	LPG	CVNXX3RA32			

DIMENSIONS AND CONNECTION CENTRE DISTANCES

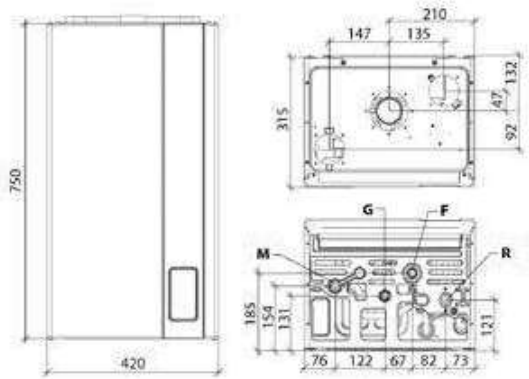

M	CH system flow (3/4")	**F**	Cold water inlet (1/2")
G	Gas inlet (1/2")	**R**	CH system return (3/4")

Technical specifications	um	RTFS 24	RTFS 28	RTFS 32
Nominal heat input (Qn)	kW	25,5	30,5	33,0
Nominal heat output (80-60°C) (Pn)	kW	23,7	28,6	30,8
Reduced heat input (Qr)	kW	12,5	13,5	16,0
Useful efficiency at nominal input (80-60°C)	%	93,0	93,7	93,4
Useful efficiency at 30% (30°C return)	%	90,2	90,6	91,0
Heating expansion vessel capacity	l	7	7	7
NOx emission class	-	3	3	3
Electric protection rating	IP	X5D	X5D	X5D

For other technical specifications, see from page 121 - Maximum length of flue gas venting, see page 166

Item	Description	Code
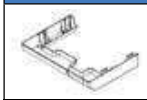	Pipes and taps cover	0COPETUB03
	Remote control, ErP V class (118x85x32 mm)	0CREMOTO04
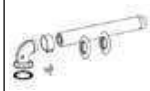	Coaxial kit D60/100 L=1m (for boiler TFS)	0KITCONC00
	Coaxial flue kit	0SDOPPIA13
	Tap kit with filter KR-KB-RT	0KITRUBI04
	Electric kit for complex solar plant management	0KITSOLC08

Item	Description	Code
	Electrical kit for zone management with external probe	0KITZONE05
	Temperature probe for solar plants	PSPTMILL00
	hot water storage tank temperature probe 3m	0KITSOND00
	Cover and anti-freeze protection kit	0KITCOPE03
	External protection kit for standard boilers	0KITCOPE04
	Coaxial air intake/flue gas venting connection for B22 type installations	0ATTCOVE04

For other accessories, see from page 165

VIRGO RTN

WALL-HUNG GAS BOILER WITH OPEN CHAMBER AND NATURAL DRAUGHT, CH ONLY.
CONNECTION TO AN EXTERNAL HOT WATER STORAGE TANK (OPTIONAL) WITH EXTERNAL 3-WAY VALVE (OPTIONAL)

- **Controls to manage two different types of solar thermal systems fitted as standard**
- **Thermoregulation with external probe (optional)**
- **Multifunction relay for connection to systems with zone valves or to solar plant or to remote alarm signal**
- Installation flexibility thanks to IPX5D electrical protection degree
- 3-speed circulation pump with built-in air purging device
- Mono-thermal primary heat exchanger
- Programmable parameters to adapt the boiler to the installation and alerts history
- Heating expansion vessel - 7 litres
- Automatic by-pass

TOUCH SCREEN INTERFACE

- *DHW and heating temperature setting*
- *Operating mode setting*
- *Solar thermal systems status display*

Available in the following models:

24 28

Model	Gas type	Code	Heat input	L x H x D	Gross weight
			Nominal (Qn) kW	mm	kg
RTN 24	NATURAL GAS	CVNXX2RC24	25,5	420x750x315	34,50
	LPG	CVNXX3RC24			
RTN 28	NATURAL GAS	CVNXX2RC28	30,5	420x750x315	35,00
	LPG	CVNXX3RC28			

DIMENSIONS AND CONNECTION CENTRE DISTANCES

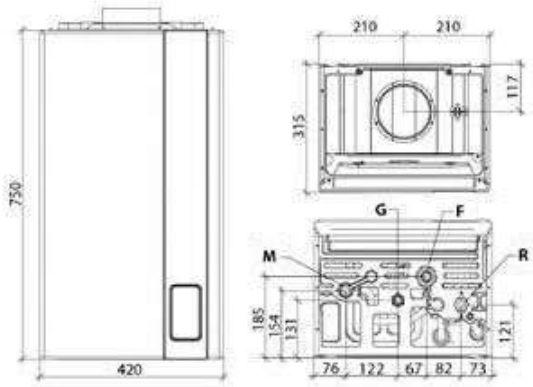

M	CH system flow (3/4")	**F**	Cold water inlet (1/2")
G	Gas inlet (1/2")	**R**	CH system return (3/4")

Technical specifications	um	RTN 24	RTN 28
Nominal heat input (Qn)	kW	25,5	30,5
Nominal heat output (80-60°C) (Pn)	kW	23,1	27,4
Reduced heat input (Qr)	kW	10,0	12,5
Useful efficiency at nominal input (80-60°C)	%	90,6	90,0
Useful efficiency at 30% (30°C return)	%	89,4	87,8
Heating expansion vessel capacity	l	7	7
NOx emission class	-	2	2
Electric protection rating	IP	X5D	X5D

For other technical specifications, see from page 122 - Maximum length of flue gas venting, see page 166

Item	Description	Code
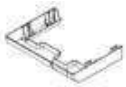	Pipes and taps cover	0COPETUB03
	Remote control, ErP V class (118x85x32 mm)	0CREMOTO04
	Tap kit with filter KR-KB-RT	0KITRUBI04
	Electric kit for complex solar plant management	0KITSOLC08

Item	Description	Code
	Electrical kit for zone management with external probe	0KITZONE05
	Temperature probe for solar plants	PSPTMILL00
	hot water storage tank temperature probe 3m	0KITSOND00

For other accessories, see from page 165

DELFIS CTN AF

BI-THERMAL WALL-HUNG GAS BOILER WITH OPEN CHAMBER AND NATURAL DRAUGHT WITH INSTANT DHW

- **Compact dimension, only 250 mm deep**
- **LCD user interface with diagnostics**
- **5-pipe, bi-thermal, high efficiency, copper heat exchanger**
- **Heating expansion vessel - 7 litres**
- Flame modulation in CH and DHW modes
- Programmable parameters to adapt the boiler to the installation and alerts history
- Pump unit including: air purging device, water pressure switch, safety valve calibrated at 3 bar, discharge tap and filler tap
- NTC temperature probe on flow and return lines
- Anti-fast, anti-freeze, pump anti-seizing, pump post-circulation and flue cleaning functions
- Exclusive compact version circulation pump with integrated air purging device

Available in the following models:

24

Model	Gas type	Code	Heat input		L x H x P	Gross weight
			Nominal (Qn) kW	Nominal DHW kW	mm	kg
CTN 24 AF	NATURAL GAS	CDAXX2CC24	24,5	24,5	400x700x250	24,50
	LPG	CDAXX3CC24				

DIMENSIONS AND CONNECTION CENTRE DISTANCES

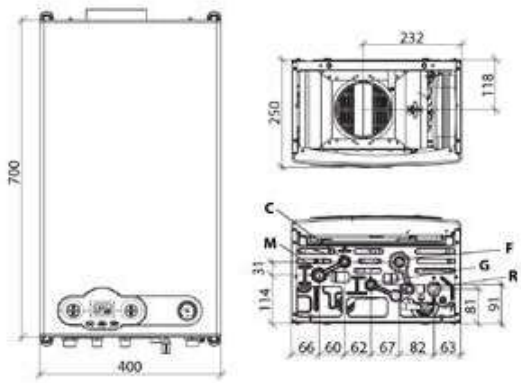

M	CH system flow (3/4")		
C	DHW outlet (1\2")	**F**	Cold water inlet (1/2")
G	Gas inlet (1/2")	**R**	CH system return (3/4")

Technical specifications	um	CTN 24 AF
Nominal heat input (Qn)	kW	24,5
Nominal heat output (80-60°C) (Pn)	kW	22,1
Reduced heat input (Qr)	kW	12,0
Useful efficiency at nominal input (80-60°C)	%	90,1
Useful efficiency at 30% (30°C return)	%	89,2
Heating expansion vessel capacity	l	7
DHW nominal heat input	kW	24,5
Specific DHW flow ΔT=30K	l/min	10,3
NOx emission class	-	2
Electric protection rating	IP	X4D

For other technical specifications, see from page 123 - Maximum length of flue gas venting, see page 166

Item	Description	Code
	Compact wall pipe cover	0COPETUB00
	Remote control, ErP V class (118x85x32 mm)	0CREMOTO04
	Flow - return cold water 90° taps kit	0KITIDBA11
	Basic hydraulic kit	0KITIDBA29

Item	Description	Code
	Plus hydr. kit for basic compact unit	0KITIDBA14
	Tap kit with filter KC-KRB-CT-RBT	0KITRUBI05
	Kit for connection to solar plant	0KITSOLC07

For other accessories, see from page 165

DELFIS CTFS AF

BI-THERMAL WALL-HUNG GAS BOILER WITH SEALED CHAMBER AND FORCED DRAUGHT WITH INSTANT DHW

- **Compact dimension, only 250 mm deep**
- **LCD user interface with diagnostics**
- **5-pipe, bi-thermal, high efficiency, copper heat exchanger**
- **Heating expansion vessel - 7 litres**
- Flame modulation in CH and DHW modes
- Programmable parameters to adapt the boiler to the installation and alerts history
- NTC temperature probe on flow and return lines
- Pump unit including: air purging device, water pressure switch, safety valve calibrated at 3 bar, discharge tap and filler tap
- Anti-fast, anti-freeze, pump anti-seizing, pump post-circulation and flue cleaning functions
- Prearrangement for connection to Remote Control (optional, supplied by the manufacturer)
- Exclusive compact version circulation pump with integrated air purging device

Available in the following models:

24

Model	Gas type	Code	Heat input		L x H x P	Gross weight
			Nominal (Qn) kW	Nominal DHW kW	mm	kg
CTFS 24 AF	NATURAL GAS	CDAXX2CA24	25,5	25,5	400x700x250	27,00
	LPG	CDAXX3CA24				

DIMENSIONS AND CONNECTION CENTRE DISTANCES

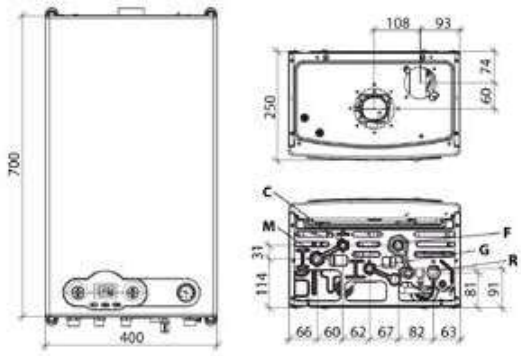

M	CH system flow (3/4")		
C	DHW outlet (1\2")	**F**	Cold water inlet (1/2")
G	Gas inlet (1/2")	**R**	CH system return (3/4")

Technical specifications	um	CTFS 24 AF
Nominal heat input (Qn)	kW	25,5
Nominal heat output (80-60°C) (Pn)	kW	23,7
Reduced heat input (Qr)	kW	12,5
Useful efficiency at nominal input (80-60°C)	%	93,1
Useful efficiency at 30% (30°C return)	%	90,5
Heating expansion vessel capacity	l	7
DHW nominal heat input	kW	25,5
Specific DHW flow ΔT=30K	l/min	11,1
NOx emission class	-	3
Electric protection rating	IP	X4D

For other technical specifications, see from page 124 - Maximum length of flue gas venting, see page 166

Item	Description	Code
	Compact wall pipe cover	0COPETUB00
	Remote control, ErP V class (118x85x32 mm)	0CREMOTO04
	Coaxial kit D60/100 L=1m (for boiler TFS)	0KITCONC00
	Flow - return cold water 90° taps kit	0KITIDBA11
	Basic hydraulic kit	0KITIDBA29

Item	Description	Code
	Plus hydr. kit for basic compact unit	0KITIDBA14
	Tap kit with filter KC-KRB-CT-RBT	0KITRUBI05
	Kit for connection to solar plant	0KITSOLC07
	Coaxial flue kit	0SDOPPIA13

For other accessories, see from page 165

DELFIS CTN

WALL-HUNG GAS BOILER WITH OPEN CHAMBER AND NATURAL DRAUGHT WITH INSTANT DHW PRODUCTION

- **Compact dimension, only 250 mm deep**
- **LCD user interface with diagnostics**
- **Thermoregulation with external probe (optional)**
- **Multifunction relay for connection to systems with zone valves or to external pump management or to remote alarm signal**
- Heating expansion vessel - 7 litres
- Stainless steel plate DHW heat exchanger
- Hydraulic unit in composite material
- Programmable parameters to adapt the boiler to the installation and alerts history
- Prearrangement for connection to Remote Control (optional, supplied by the manufacturer)
- Mono-thermal primary heat exchanger
- Automatic by-pass

Available in the following models:

24

Model	Gas type	Code	Heat input		L x H x D	Gross weight
			Nominal (Qn) kW	Nominal DHW kW	mm	kg
CTN 24	NATURAL GAS	CDHXX2CC24	24,5	24,5	400x700x250	25,00
	LPG	CDHXX3CC24				

DIMENSIONS AND CONNECTION CENTRE DISTANCES

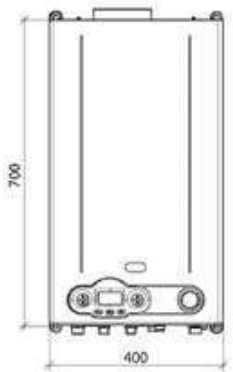

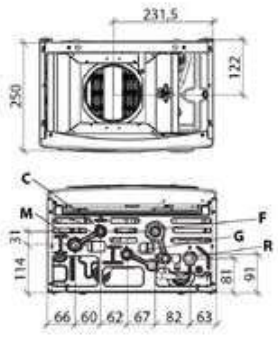

M	CH system flow (3/4")		
C	DHW outlet (1\2")	**F**	Cold water inlet (1/2")
G	Gas inlet (1/2")	**R**	CH system return (3/4")

Technical specifications	um	CTN 24
Nominal heat input (Qn)	kW	24,5
Nominal heat output (80-60°C) (Pn)	kW	22,07
Reduced heat input (Qr)	kW	12,0
Useful efficiency at nominal input (80-60°C)	%	90,1
Useful efficiency at 30% (30°C return)	%	88,45
Heating expansion vessel capacity	l	7
DHW nominal heat input	kW	24,5
Specific DHW flow ΔT=30K	l/min	10,6
NOx emission class	-	2
Electric protection rating	IP	X4D

Item	Description	Code
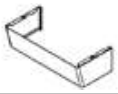	Compact wall pipe cover	0COPETUB00
	Remote control, ErP V class (118x85x32 mm)	0CREMOTO04
	Flow - return cold water 90° taps kit	0KITIDBA11
	Basic hydraulic kit	0KITIDBA29
	Plus hydr. kit for basic compact unit	0KITIDBA14

Item	Description	Code
	Tap kit with filter KC-KRB-CT-RBT	0KITRUBI05
	Kit for connection to solar plant	0KITSOLC07
	Electric kit for complex solar plant management	0KITSOLC08
	Electrical kit for zone management with external probe	0KITZONE05
	External probe (60x45x31 mm)	0SONDAES01

For other accessories, see from page 165

DELFIS RBTN

WALL-HUNG GAS BOILER WITH OPEN CHAMBER AND NATURAL DRAUGHT, CH ONLY, WITH INTEGRATED 3-WAY VALVE CONNECTION
CONNECTION TO AN EXTERNAL HOT WATER STORAGE TANK (OPTIONAL)

- **Compact dimension, only 250 mm deep**
- **LCD user interface with diagnostics**
- **Multifunction relay for connection to systems with zone valves or to external pump management or to remote alarm signal**
- **Thermoregulation with external probe (optional)**
- **Integrated 3-way deviating valve**
- Mono-thermal primary heat exchanger
- Heating expansion vessel - 7 litres
- Hydraulic unit in composite material
- Programmable parameters to adapt the boiler to the installation and alerts history
- Pump unit including: air purging device, water pressure switch, safety valve calibrated at 3 bar, discharge tap and filler tap
- Automatic by-pass
- Exclusive compact version circulation pump with integrated air purging device

Available in the following models:

24

Model	Gas type	Code	Heat input	L x H x D	Gross weight
			Nominal (Qn) kW	mm	kg
RBTN 24	NATURAL GAS	CDHXX2RH24	24,5	400x700x250	25,00
	LPG	CDHXX3RH24			

DIMENSIONS AND CONNECTION CENTRE DISTANCES

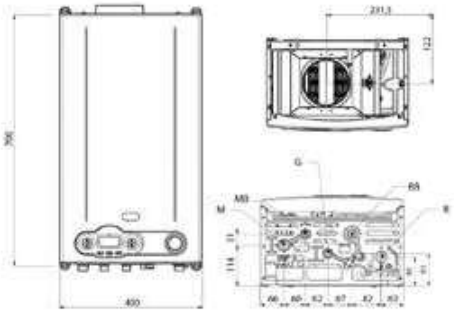

M	CH system flow - 3/4"	**RB**	Secondary return from hot water storage tank (1/2")
MB	Secondary flow to hot water storage tank (1/2")		
G	Gas inlet (1/2")	**R**	CH system return - 3/4"

Technical specifications	um	RBTN 24
Nominal heat input (Qn)	kW	24,5
Nominal heat output (80-60°C) (Pn)	kW	22,07
Reduced heat input (Qr)	kW	12,0
Useful efficiency at nominal input (80-60°C)	%	90,1
Useful efficiency at 30% (30°C return)	%	88,45
Heating expansion vessel capacity	l	7
NOx emission class	-	2
Electric protection rating	IP	X4D

For other technical specifications, see from page 126 - Maximum length of flue gas venting, see page 166

Item	Description	Code
	Compact wall pipe cover	0COPETUB00
	Remote control, ErP V class (118x85x32 mm)	0CREMOTO04
	Flow - return cold water 90° taps kit	0KITIDBA11
	Basic hydraulic kit	0KITIDBA29
	Plus hydr. kit for basic compact unit	0KITIDBA14
	Tap kit with filter KR-KB-RT	0KITRUBI04

Item	Description	Code
	Electrical kit for zone management with external probe	0KITZONE05
	External probe (60x45x31 mm)	0SONDAES01
	Electric kit for complex solar plant management	0KITSOLC08

For other accessories, see from page 165

Accessories supplied as standard

Item	Description
	hot water storage tank temperature probe 3m

DELFIS CTFS

WALL-HUNG GAS BOILER WITH SEALED CHAMBER AND FORCED DRAUGHT WITH INSTANT DHW PRODUCTION

- **Compact dimension, only 250 mm deep**
- **LCD user interface with diagnostics**
- **Multifunction relay for connection to systems with zone valves or to external pump management or to remote alarm signal**
- **Thermoregulation with external probe (optional)**
- Heating expansion vessel - 7 litres
- Stainless steel plate DHW heat exchanger
- Hydraulic unit in composite material
- Programmable parameters to adapt the boiler to the installation and alerts history
- Exclusive compact version circulation pump with integrated air purging device
- Automatic by-pass

Available in the following models:

24

Model	Gas type	Code	Heat input	L x H x D	Gross weight
			Nominal (Qn) kW	mm	kg
CTFS 24	NATURAL GAS	CDHXX2CA24	25,5	400x700x250	28,00
	LPG	CDHXX3CA24			

DIMENSIONS AND CONNECTION CENTRE DISTANCES

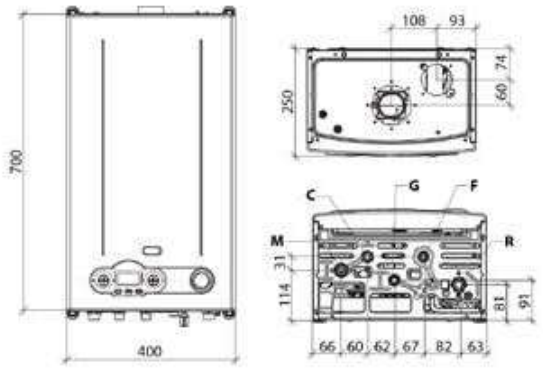

M	CH system flow (3/4")		
C	DHW outlet (1\2")	**F**	Cold water inlet (1/2")
G	Gas inlet (1/2")	**R**	CH system return (3/4")

Technical specifications	um	CTFS 24
Nominal heat input (Qn)	kW	25,5
Nominal heat output (80-60°C) (Pn)	kW	23,7
Reduced heat input (Qr)	kW	12,5
Useful efficiency at nominal input (80-60°C)	%	93,0
Useful efficiency at 30% (30°C return)	%	90,4
Heating expansion vessel capacity	l	7
DHW nominal heat input	kW	25,5
Specific DHW flow ΔT=30K	l/min	11,1
NOx emission class	-	2
Electric protection rating	IP	X4D

For other technical specifications, see from page 127 - Maximum length of flue gas venting, see page 166

Item	Description	Code
	Compact wall pipe cover	0COPETUB00
	Remote control, ErP V class (118x85x32 mm)	0CREMOTO04
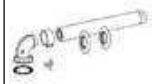	Coaxial kit D60/100 L=1m (for boiler TFS)	0KITCONC00
	Flow - return cold water 90° taps kit	0KITIDBA11
	Basic hydraulic kit	0KITIDBA29
	Plus hydr. kit for basic compact unit	0KITIDBA14

Item	Description	Code
	Tap kit with filter KC-KRB-CT-RBT	0KITRUBI05
	Kit for connection to solar plant	0KITSOLC07
	Electrical kit for zone management with external probe	0KITZONE05
	External probe (60x45x31 mm)	0SONDAES01
	Coaxial flue kit	0SDOPPIA13
	Electric kit for complex solar plant management	0KITSOLC08

For other accessories, see from page 165

DELFIS RTFS

WALL-HUNG GAS BOILER WITH SEALED CHAMBER AND FORCED DRAUGHT, CH ONLY
CONNECTION TO AN EXTERNAL HOT WATER STORAGE TANK (OPTIONAL) WITH EXTERNAL 3-WAY VALVE (OPTIONAL)

- **Compact dimension, only 250 mm deep**
- **LCD user interface with diagnostics**
- **Thermoregulation with external probe (optional)**
- **Multifunction relay for connection to systems with zone valves or to external pump management or to remote alarm signal**
- Heating expansion vessel - 7 litres
- Programmable parameters to adapt the boiler to the installation and alerts history
- Hydraulic unit in composite material
- Pump unit including: air purging device, water pressure switch, safety valve calibrated at 3 bar, discharge tap and filler tap
- Automatic by-pass
- Exclusive compact version circulation pump with integrated air purging device

Available in the following models:

24

Model	Gas type	Code	Heat input	L x H x D	Gross weight
			Nominal (Qn) kW	mm	kg
RTFS 24	NATURAL GAS	CDHXX2RA24	25,5	400x700x250	27,50
	LPG	CDHXX3RA24			

DIMENSIONS AND CONNECTION CENTRE DISTANCES

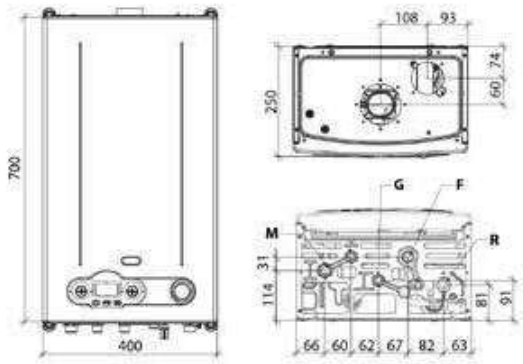

M	CH system flow (3/4")	**F**	Cold water inlet (1/2")
G	Gas inlet (1/2")	**R**	CH system return (3/4")

Technical specifications	um	RTFS 24
Nominal heat input (Qn)	kW	25,5
Nominal heat output (80-60°C) (Pn)	kW	23,7
Reduced heat input (Qr)	kW	12,5
Useful efficiency at nominal input (80-60°C)	%	93,0
Useful efficiency at 30% (30°C return)	%	90,4
Heating expansion vessel capacity	l	7
NOx emission class	-	2
Electric protection rating	IP	X4D

For other technical specifications, see from page 128 - Maximum length of flue gas venting, see page 166

Item	Description	Code
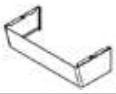	Compact wall pipe cover	0COPETUB00
	Remote control, ErP V class (118x85x32 mm)	0CREMOTO04
	Coaxial kit D60/100 L=1m (for boiler TFS)	0KITCONC00
	Electrical kit for zone management with external probe	0KITZONE05

Item	Description	Code
	External probe (60x45x31 mm)	0SONDAES01
	Tap kit with filter KR-KB-RT	0KITRUBI04
	Coaxial flue kit	0SDOPPIA13
	hot water storage tank temperature probe 3m	0KITSOND00

For other accessories, see from page 165

DELFIS RBTFS

WALL-HUNG GAS BOILER WITH SEALED CHAMBER AND FORCED DRAUGHT, CH ONLY, WITH INTEGRATED 3-WAY VALVE
CONNECTION TO AN EXTERNAL HOT WATER STORAGE TANK (OPTIONAL)

- **Compact dimension, only 250 mm deep**
- **LCD user interface with diagnostics**
- **Mono-thermal primary heat exchanger**
- **Thermoregulation with external probe (optional)**
- **Multifunction relay for connection to systems with zone valves or to external pump management or to remote alarm signal**
- **Integrated 3-way deviating valve**
- Heating expansion vessel - 7 litres
- Programmable parameters to adapt the boiler to the installation and alerts history
- Hydraulic unit in composite material
- Pump unit including: air purging device, water pressure switch, safety valve calibrated at 3 bar, discharge tap and filler tap
- Automatic by-pass
- Exclusive compact version circulation pump with integrated air purging device

Available in the following models:

24

Model	Gas type	Code	Heat input	L x H x D	Gross weight
			Nominal (Qn) kW	mm	kg
RBTFS 24	NATURAL GAS	CDHXX2RF24	25,5	400x700x250	27,50
	LPG	CDHXX3RF24			

DIMENSIONS AND CONNECTION CENTRE DISTANCES

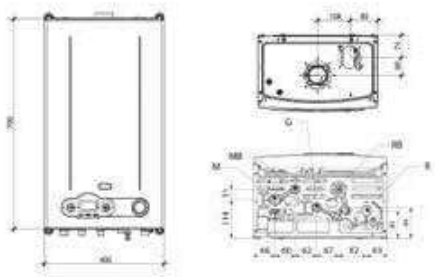

M	CH system flow - 3/4"	**RB**	Secondary return from hot water storage tank (1/2")
MB	Secondary flow to hot water storage tank (1/2")		
G	Gas inlet (1/2")	**R**	CH system return - 3/4"

Technical specifications	um	RBTFS 24
Nominal heat input (Qn)	kW	25,5
Nominal heat output (80-60°C) (Pn)	kW	23,7
Reduced heat input (Qr)	kW	12,5
Useful efficiency at nominal input (80-60°C)	%	93,0
Useful efficiency at 30% (30°C return)	%	90,4
Heating expansion vessel capacity	l	7
NOx emission class	-	2
Electric protection rating	IP	X4D

For other technical specifications, see from page 129 - Maximum length of flue gas venting, see page 166

Item	Description	Code
	Compact wall pipe cover	0COPETUB00
	Remote control, ErP V class (118x85x32 mm)	0CREMOTO04
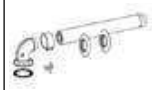	Coaxial kit D60/100 L=1m (for boiler TFS)	0KITCONC00
	Flow - return cold water 90° taps kit	0KITIDBA11
	Electrical kit for zone management with external probe	0KITZONE05
	External probe (60x45x31 mm)	0SONDAES01

Item	Description	Code
	Tap kit with filter KC-KRB-CT-RBT	0KITRUBI05
	Electric kit for complex solar plant management	0KITSOLC08
	Coaxial flue kit	0SDOPPIA13

For other accessories, see from page 165

Accessories supplied as standard

Item	Description
	hot water storage tank temperature probe 3m

DELFIS CTFS 40

WALL-HUNG GAS BOILER WITH SEALED CHAMBER AND FORCED DRAUGHT WITH INSTANT DHW PRODUCTION

- **LCD user interface with diagnostics**
- **Multifunction relay for connection to systems with zone valves or to external pump management or to remote alarm signal**
- **Heating expansion vessel - 10 litres**
- **Thermoregulation with external probe (optional)**
- **High domestic hot water production (22.2 l/min ΔT 25°C)**
- Stainless steel, atmospheric burner that can run on several gases
- Hydraulic unit in composite material
- Programmable parameters to adapt the boiler to the installation and alerts history
- Flame modulation in CH and DHW modes
- Stainless steel plate DHW heat exchanger
- Automatic by-pass

Available in the following models:

40

Model	Gas type	Code	Heat input		L x H x D	Gross weight
			Nominal (Qn) kW	Nominal DHW kW	mm	kg
CTFS 40	NATURAL GAS	CDHXX2CA40	41,0	41,0	400x700x346	33,00
	LPG	CDHXX3CA40				

DIMENSIONS AND CONNECTION CENTRE DISTANCES

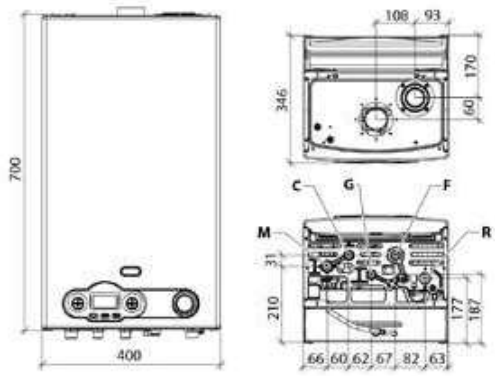

M	CH system flow (3/4")		
C	DHW outlet (1\2")	**F**	Cold water inlet (1/2")
G	Gas inlet (1/2")	**R**	CH system return (3/4")

Technical specifications	um	CTFS 40
Nominal heat input (Qn)	kW	41,0
Nominal heat output (80-60°C) (Pn)	kW	38,0
Reduced heat input (Qr)	kW	15,0
Useful efficiency at nominal input (80-60°C)	%	92,7
Useful efficiency at 30% (30°C return)	%	89,4
Heating expansion vessel capacity	l	10
DHW nominal heat input	kW	41,0
Specific DHW flow ΔT=30K	l/min	18,5
NOx emission class	-	3
Electric protection rating	IP	X4D

For other technical specifications, see from page 130 - Maximum length of flue gas venting, see page 166

Item	Description	Code
	Remote control, ErP V class (118x85x32 mm)	0CREMOTO04
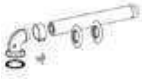	Coaxial kit D60/100 L=1m (for boiler TFS)	0KITCONC00
	Flow - return cold water 90° taps kit	0KITIDBA11
	External probe (60x45x31 mm)	0SONDAES01
	Electrical kit for zone management with external probe	0KITZONE05

Item	Description	Code
	Tap kit with filter KC-KRB-CT-RBT	0KITRUBI05
	Kit for connection to solar plant	0KITSOLC07
	Electric kit for complex solar plant management	0KITSOLC08
	Coaxial flue kit	0SDOPPIA13

For other accessories, see from page 165

DELFIS RTFS 40

WALL-HUNG GAS BOILER WITH SEALED CHAMBER AND FORCED DRAUGHT, CH ONLY
CONNECTION TO AN EXTERNAL HOT WATER STORAGE TANK (OPTIONAL) WITH EXTERNAL 3-WAY VALVE (OPTIONAL)

- **Compact dimension, only 250 mm deep**
- **LCD user interface with diagnostics**
- **Thermoregulation with external probe (optional)**
- **Multifunction relay for connection to systems with zone valves or to external pump management or to remote alarm signal**
- Stainless steel, atmospheric burner that can run on several gases
- Hydraulic unit in composite material
- Additional relay to manage 2 heating zones
- Programmable parameters to adapt the boiler to the installation and alerts history
- Flame modulation in CH and DHW modes
- Automatic by-pass

Available in the following models:

40

Model	Gas type	Code	Heat input	L x H x D	Gross weight
			Nominal (Qn) kW	mm	kg
RTFS 40	NATURAL GAS	CDHXX2RA40	41,0	400x700x250	24,40
	LPG	CDHXX3RA40			

DIMENSIONS AND CONNECTION CENTRE DISTANCES

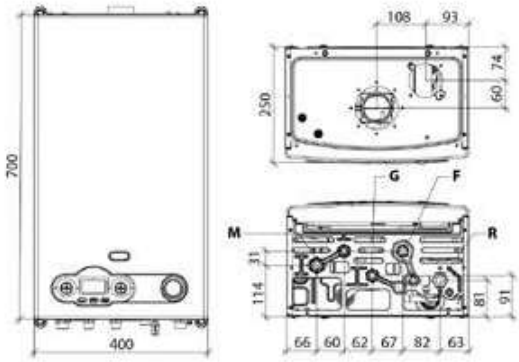

M	CH system flow (3/4")	**F**	Cold water inlet (1/2")
G	Gas inlet (1/2")	**R**	CH system return (3/4")

Technical specifications	um	RTFS 40
Nominal heat input (Qn)	kW	41,0
Nominal heat output (80-60°C) (Pn)	kW	38,0
Reduced heat input (Qr)	kW	15,0
Useful efficiency at nominal input (80-60°C)	%	92,7
Useful efficiency at 30% (30°C return)	%	89,4
NOx emission class	-	3
Electric protection rating	IP	X4D

For other technical specifications, see from page 131 - Maximum length of flue gas venting, see page 166

Item	Description	Code
	Remote control, ErP V class (118x85x32 mm)	0CREMOTO04
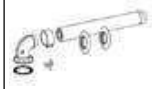	Coaxial kit D60/100 L=1m (for boiler TFS)	0KITCONC00
	Tap kit with filter KR-KB-RT	0KITRUBI04
	Electrical kit for zone management with external probe	0KITZONE05

Item	Description	Code
	External probe (60x45x31 mm)	0SONDAES01
	hot water storage tank temperature probe 3m	0KITSOND00
	Coaxial flue kit	0SDOPPIA13

For other accessories, see from page 165

DELFIS RBTFS 40

WALL-HUNG GAS BOILER WITH SEALED CHAMBER AND FORCED DRAUGHT, CH ONLY, WITH INTEGRATED 3-WAY VALVE

CONNECTION TO AN EXTERNAL HOT WATER STORAGE TANK (OPTIONAL)

- **LCD user interface with diagnostics**
- **Multifunction relay for connection to systems with zone valves or to external pump management or to remote alarm signal**
- **Thermoregulation with external probe (optional)**
- **Programmable parameters to adapt the boiler to the installation and alerts history**
- **Integrated 3-way deviating valve**
- Stainless steel, atmospheric burner that can run on several gases
- Hydraulic unit in composite material
- Flame modulation in CH and DHW modes
- Automatic by-pass

Available in the following models:

40

Model	Gas type	Code	Heat input	L x H x D	Gross weight
			Nominal (Qn) kW	mm	kg
RBTFS 40	NATURAL GAS	CDHXX2RF40	41,0	400x700x250	24,50
	LPG	CDHXX3RF40			

DIMENSIONS AND CONNECTION CENTRE DISTANCES

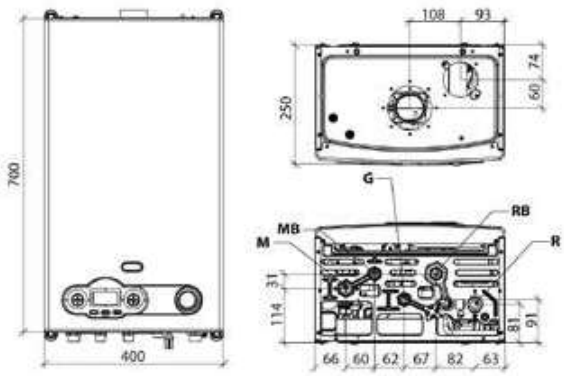

M	CH system flow (3/4")	**RB**	Secondary return from hot water storage tank (1/2")
MB	Secondary flow to hot water storage tank (1/2")		
G	Gas inlet (1/2")	**R**	CH system return (3/4")

Technical specifications	um	RBTFS 40
Nominal heat input (Qn)	kW	41,0
Nominal heat output (80-60°C) (Pn)	kW	38,0
Reduced heat input (Qr)	kW	15,0
Useful efficiency at nominal input (80-60°C)	%	92,7
Useful efficiency at 30% (30°C return)	%	89,4
NOx emission class	-	3
Electric protection rating	IP	X4D

For other technical specifications, see from page 132 - Maximum length of flue gas venting, see page 166

Item	Description	Code
	Remote control, ErP V class (118x85x32 mm)	0CREMOTO04
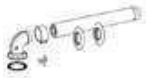	Coaxial kit D60/100 L=1m (for boiler TFS)	0KITCONC00
	Flow - return cold water 90° taps kit	0KITIDBA11
	Tap kit with filter KC-KRB-CT-RBT	0KITRUBI05
	Electrical kit for zone management with external probe	0KITZONE05
	External probe (60x45x31 mm)	0SONDAES01

Item	Description	Code
	Coaxial flue kit	0SDOPPIA13
	Electric kit for complex solar plant management	0KITSOLC08

For other accessories, see from page 165

Accessories supplied as standard

Item	Description
	hot water storage tank temperature probe 3m

VEGA CTFS

WALL-HUNG GAS BOILER WITH SEALED CHAMBER AND FORCED DRAUGHT WITH INSTANT DHW PRODUCTION

- **Ambient temperature probe supplied as standard**
- **Ambient temperature can be set from the boiler if an ambient probe is installed**
- **Thermoregulation with external probe (optional)**
- **LCD user interface with diagnostics**
- Mono-thermal primary heat exchanger
- 3-speed circulation pump with built-in air purging device
- Heating expansion vessel - 7 litres
- Programmable parameters to adapt the boiler to the installation and alerts history
- Stainless steel plate DHW heat exchanger
- Hydraulic unit in composite material
- Automatic by-pass

Available in the following models:

24 28 32

Model	Gas type	Code	Heat input		L x H x D	Gross weight
			Nominal (Qn) kW	Nominal DHW kW	mm	kg
CTFS 24	NATURAL GAS	CVGXX2CA24	25,5	25,5	420x750x315	37,50
	LPG	CVGXX3CA24				
CTFS 28	NATURAL GAS	CVGXX2CA28	30,5	30,5	420x750x315	38,00
	LPG	CVGXX3CA28				
CTFS 32	NATURAL GAS	CVGXX2CA32	33,0	33,0	420x750x315	38,50
	LPG	CVGXX3CA32				

DIMENSIONS AND CONNECTION CENTRE DISTANCES

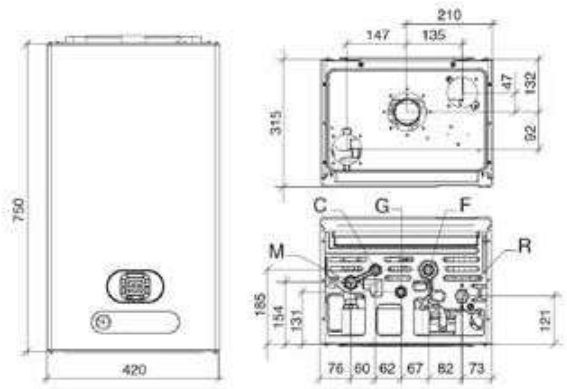

M CH system flow (3/4")
C DHW outlet (1\2")
G Gas inlet (1/2")
F Cold water inlet (1/2")
R CH system return (3/4")

Technical specifications	um	CTFS 24	CTFS 28	CTFS 32
Nominal heat input (Qn)	kW	25,5	30,5	33,0
Nominal heat output (80-60°C) (Pn)	kW	23,7	28,6	30,8
Reduced heat input (Qr)	kW	12,5	13,5	16,0
Useful efficiency at nominal input (80-60°C)	%	93,0	93,7	93,4
Useful efficiency at 30% (30°C return)	%	90,2	90,6	91,0
Heating expansion vessel capacity	l	7	7	7
DHW nominal heat input	kW	25,5	30,5	33,0
Specific DHW flow ΔT=30K	l/min	11,6	14,2	15,1
NOx emission class	-	3	3	3
Electric protection rating	IP	X4D	X4D	X4D

For other technical specifications, see from page 133 - Maximum length of flue gas venting, see page 166

Item	Description	Code
	Remote control, ErP V class (118x85x32 mm)	0CREMOTO04
	Wall spacing kit	0DISTANZ00
	Pipes and taps cover	0COPETUB03
	Tap kit with filter KC-KRB-CT-RBT	0KITRUBI05
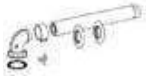	Coaxial kit D60/100 L=1m (for boiler TFS)	0KITCONC00
	Coaxial flue kit	0SDOPPIA13
	Split comp. plus kit '11 (while stocks last)	0SDOPPIA12

Item	Description	Code
	External probe (60x45x31 mm)	0SONDAES01
	Basic hydraulic kit	0KITIDBA16
	4 angled tap valves kit	0KITIDBA24

For other accessories, see from page 165

Accessories supplied as standard

Item	Description
	Ambient temperature probe

NIBIR CTFS

WALL-HUNG GAS BOILER WITH SEALED CHAMBER AND FORCED DRAUGHT WITH INSTANT DHW PRODUCTION

- **High-efficiency monothermal heat exchanger**
- **Compact dimension, only 250 mm deep**
- **LCD user interface with diagnostics**
- **Ambient temperature can be set from the boiler if an ambient probe is installed**
- **Ambient temperature probe supplied as standard**
- Stainless steel plate DHW heat exchanger
- Exclusive compact version circulation pump with integrated air purging device
- LCD interface to view CH flow water temperature, DHW outlet temperature, failure codes, CH setting, DHW setting and operating status setting
- Programmable parameters to adapt the boiler to the installation and alerts history
- Hydraulic unit in composite material
- Heating expansion vessel - 6 litres

Available in the following models:

9 11 13 15 18 24

Model	Gas type	Code	Heat input		L x H x D	Gross weight
			Nominal (Qn) kW	Nominal DHW kW	mm	kg
CTFS 9	NATURAL GAS	CNEXX2CA09	10,4	20,0	400x700x250	25,00
	LPG	CNEXX3CA09				
CTFS 11	NATURAL GAS	CNEXX2CA11	12,3	20,0	400x700x250	25,00
	LPG	CNEXX3CA11				
CTFS 13	NATURAL GAS	CNEXX2CA13	14,2	20,0	400x700x250	25,00
	LPG	CNEXX3CA13				
CTFS 15	NATURAL GAS	CNEXX2CA15	16,4	20,0	400x700x250	25,00
	LPG	CNEXX3CA15				
CTFS 18	NATURAL GAS	CNEXX2CA18	20,0	20,0	400x700x250	25,50
	LPG	CNEXX3CA18				
CTFS 24	NATURAL GAS	CNEXX2CA24	25,5	25,5	400x700x250	25,50
	LPG	CNEXX3CA24				

DIMENSIONS AND CONNECTION CENTRE DISTANCES

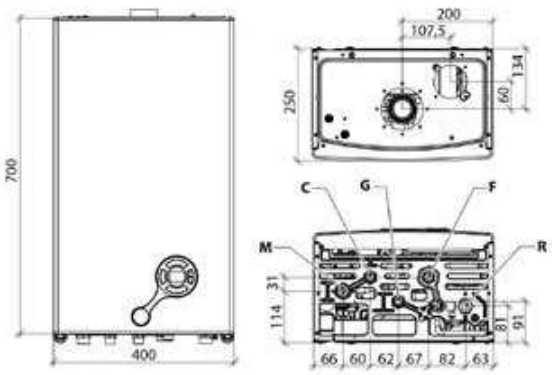

M	CH system flow (3/4")		
C	DHW outlet (1\2")	**F**	Cold water inlet (1/2")
G	Gas inlet (1/2")	**R**	CH system return (3/4")

Technical specifications	um	CTFS 9	CTFS 11	CTFS 13	CTFS 15	CTFS 18	CTFS 24
Nominal heat input (Qn)	kW	10,4	12,3	14,2	16,4	20,0	25,5
Nominal heat output (80-60°C) (Pn)	kW	9,3	11,1	13,0	15,1	18,6	23,3
Reduced heat input (Qr)	kW	7,0	7,0	7,0	7,0	7,0	11,5
Useful efficiency at nominal input (80-60°C)	%	89,2	90,2	91,2	91,8	93,2	91,2
Useful efficiency at 30% (30°C return)	%	86,2	86,9	87,6	87,7	88,2	87,4
Heating expansion vessel capacity	l	6	6	6	6	6	6
DHW nominal heat input	kW	20,0	20,0	20,0	20,0	20,0	25,5
Specific DHW flow ΔT=30K	l/min	9,5	9,5	9,5	9,5	9,5	11,7
NOx emission class	-	3	3	3	3	3	3
Electric protection rating	IP	X4D	X4D	X4D	X4D	X4D	X4D

For other technical specifications, see from page 134 - Maximum length of flue gas venting, see page 166

Item	Description	Code
	Compact wall pipe cover	0COPETUB00
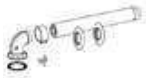	Coaxial kit D60/100 L=1m (for boiler TFS)	0KITCONC00
	Flow - return cold water 90° taps kit	0KITIDBA11
	Basic hydraulic kit	0KITIDBA29
	Plus hydr. kit for basic compact unit	0KITIDBA14

Item	Description	Code
	Tap kit with filter KC-KRB-CT-RBT	0KITRUBI05
	External probe (60x45x31 mm)	0SONDAES01
	Coaxial flue kit	0SDOPPIA13
	Ambient temperature probe	0KITSAMB00

For other accessories, see from page 165

NIBIR CTFS (CU)

WALL-HUNG GAS BOILER WITH SEALED CHAMBER AND FORCED DRAUGHT WITH INSTANT DHW PRODUCTION

- **Mono-thermal, copper heat exchanger**
- **Compact dimension, only 250 mm deep**
- **LCD user interface with diagnostics**
- **Ambient temperature can be set from the boiler if an ambient probe is installed**
- **Ambient temperature probe supplied as standard**
- Stainless steel plate DHW heat exchanger
- Exclusive compact version circulation pump with integrated air purging device
- LCD interface to view CH flow water temperature, DHW outlet temperature, failure codes, CH setting, DHW setting and operating status setting
- Programmable parameters to adapt the boiler to the installation and alerts history
- Hydraulic unit in composite material
- Heating expansion vessel - 6 litres

Available in the following models:

9 11 13 15 18 24

Model	Gas type	Code	Heat input		L x H x D	Gross weight
			Nominal (Qn) kW	Nominal DHW kW	mm	kg
CTFS 9	NATURAL GAS	CNEXX2CG09	10,4	20,0	400x700x250	25,00
	LPG	CNEXX3CG09				
CTFS 11	NATURAL GAS	CNEXX2CG11	12,3	20,0	400x700x250	25,00
	LPG	CNEXX3CG11				
CTFS 13	NATURAL GAS	CNEXX2CG13	14,2	20,0	400x700x250	25,00
	LPG	CNEXX3CG13				
CTFS 15	NATURAL GAS	CNEXX2CG15	16,4	20,0	400x700x250	25,00
	LPG	CNEXX3CG15				
CTFS 18	NATURAL GAS	CNEXX2CG18	20,0	20,0	400x700x250	25,50
	LPG	CNEXX3CG18				
CTFS 24	NATURAL GAS	CNEXX2CG24	25,5	25,5	400x700x250	25,50
	LPG	CNEXX3CG24				

DIMENSIONS AND CONNECTION CENTRE DISTANCES

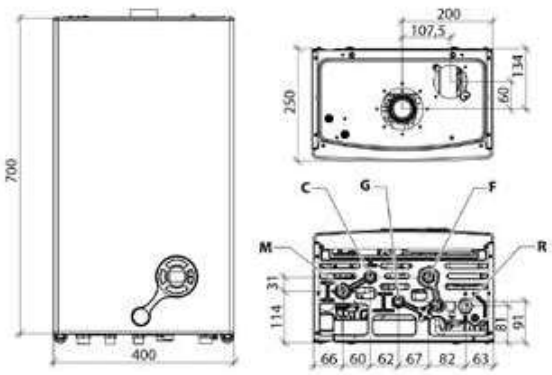

M	CH system flow (3/4")		
C	DHW outlet (1\2")	**F**	Cold water inlet (1/2")
G	Gas inlet (1/2")	**R**	CH system return (3/4")

Technical specifications	um	CTFS 9	CTFS 11	CTFS 13	CTFS 15	CTFS 18	CTFS 24
Nominal heat input (Qn)	kW	10,4	12,3	14,2	16,4	20,0	25,5
Nominal heat output (80-60°C) (Pn)	kW	9,3	11,1	13,0	15,1	18,6	23,3
Reduced heat input (Qr)	kW	7,0	7,0	7,0	7,0	7,0	11,5
Useful efficiency at nominal input (80-60°C)	%	89,2	90,2	91,2	91,8	93,2	91,2
Useful efficiency at 30% (30°C return)	%	86,2	86,9	87,6	87,7	88,2	87,4
Heating expansion vessel capacity	l	6	6	6	6	6	6
DHW nominal heat input	kW	20,0	20,0	20,0	20,0	20,0	25,5
Specific DHW flow ΔT=25K	l/min	11,4	11,4	11,4	11,4	11,4	14,0
Specific DHW flow ΔT=30K	l/min	9,5	9,5	9,5	9,5	9,5	11,7
NOx emission class	-	3	3	3	3	3	3
Electric protection rating	IP	X4D	X4D	X4D	X4D	X4D	X4D

For other technical specifications, see from page 134 - Maximum length of flue gas venting, see page 166

Item	Description	Code
	Compact wall pipe cover	0COPETUB00
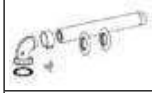	Coaxial kit D60/100 L=1m (for boiler TFS)	0KITCONC00
	Flow - return cold water 90° taps kit	0KITIDBA11
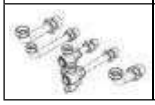	Plus hydr. kit for basic compact unit	0KITIDBA14

Item	Description	Code
	Basic hydraulic kit	0KITIDBA29
	Tap kit with filter KC-KRB-CT-RBT	0KITRUBI05
	Coaxial flue kit	0SDOPPIA13
	External probe (60x45x31 mm)	0SONDAES01

For other accessories, see from page 165

ALTAIR RTN E

FLOOR STANDING BOILER WITH OPEN CHAMBER AND NATURAL DRAUGHT, CH ONLY

- **Stainless steel atmospheric burner**
- **Electronic ignition and ionisation flame detection device**
- **Heat exchanger with cast iron elements**
- Prearrangement for connection to the electric board (optional) for the remote management of a water heater (optional), and for the connection to the electric board (optional) for the management of three heating zones
- Control and management electric panel, CH circulation pump control, prearranged for connection to the ambient thermostat and to a water pressure switch
- Safety limit thermostat
- Safety flue gas thermostat

Available in the following models:

from 18 to 100

Model	Gas type	Code	Heat output (kW)	A x B x C	D	G	Gross weight (kg)
			Nominal Pn	mm	mm	inches	
RTN E 18	NATURAL GAS	CATXX2MF18	18	450x850x525	110	¾"	116
	LPG	CATXX3MF18					
RTN E 24	NATURAL GAS	CATXX2MF24	24	450x850x525	130	¾"	116
	LPG	CATXX3MF24					
RTN E 32	NATURAL GAS	CATXX2MF32	31.5	450x850x625	130	¾"	151
	LPG	CATXX3MF32					
RTN E 36	NATURAL GAS	CATXX2MF36	36	450x850x625	130	¾"	151
	LPG	CATXX3MF36					
RTN E 48	NATURAL GAS	CATXX2MF48	48	450x850x765	150	¾"	183,5
	LPG	CATXX3MF48					
RTN E 60	NATURAL GAS	CATXX2MF60	60	450x1000x935	180	1"	229
	LPG	CATXX3MF60					
RTN E 70	NATURAL GAS	CATXX2MF70	70	450x1000x1052	180	1"	263,5
	LPG	CATXX3MF70					
RTN E 80	NATURAL GAS	CATXX2MF80	80	450x1000x1153	200	1"	297,5
	LPG	CATXX3MF80					
RTN E 90	NATURAL GAS	CATXX2MF90	90	450x1000x1280	220	1"	332,5
	LPG	CATXX3MF90					
RTN E 100	NATURAL GAS	CATXX2MF1A	100	450x1000x1430	250	1"	371,5
	LPG	CATXX3MF1A					

DIMENSIONS AND CONNECTION CENTRE DISTANCES

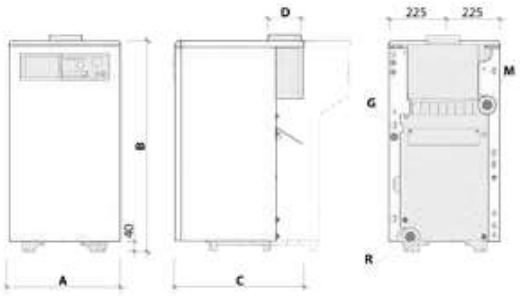

G Gas connection (see table)
M Flow (1" 1/2)
R Return (1" 1/2)

Model	-	RTN E 18	RTN E 24	RTN E 32	RTN E 36	RTN E 48
Type	-	B11BS	B11BS	B11BS	B11BS	B11BS
Ignition	-	ELECTRONIC	ELECTRONIC	ELECTRONIC	ELECTRONIC	ELECTRONIC
Heat exchanger number of elements	-	3	3	4	4	5
Nominal heat output (80-60°C) (Pn)	kW	18	24	31.5	36	48
Nominal heat input (Qn)	kW	20	26.6	34.4	39.2	52.8
Useful efficiency at nominal input (80-60°C)	%	89.6	90.9	90.9	90.83	91.84
Useful efficiency at 30% (30°C return)	%	89.2	91.1	89	90.75	90.4
Water capacity	l	10	10	13,4	13,4	16,8
Minimum water flow	l/h	400	520	680	770	1030
CH temperature setting range	°C	45 ÷ 85	45 ÷ 85	45 ÷ 85	45 ÷ 85	45 ÷ 85
Maximum pressure of the heating circuit	bar	4	4	4	4	4
Flue gas discharge pipe diameter	mm	110	130	130	130	150
Power supply voltage/frequency	V/Hz	230/50	230/50	230/50	230/50	230/50
Maximum power consumption	W	10	10	10	10	10
Electric protection rating	IP	40	40	40	40	40

Model	-	RTN E 60	RTN E 70	RTN E 80	RTN E 90	RTN E 100
Type	-	B11BS	B11BS	B11BS	B11BS	B11BS
Ignition	-	ELECTRONIC	ELECTRONIC	ELECTRONIC	ELECTRONIC	ELECTRONIC
Heat exchanger number of elements	-	6	7	8	9	10
Nominal heat output (80-60°C) (Pn)	kW	60	70	80	90	100
Nominal heat input (Qn)	kW	66	76.3	87.3	98.2	109.7
Useful efficiency at nominal input (80-60°C)	%	91.7	91.7	91.7	91.6	91.6
Useful efficiency at 30% (30°C return)	%	90.6	90.4	90.3	90.3	90.22
Water capacity	l	20,2	23,5	26,8	30,1	33,4
Minimum water flow	l/h	1200	1500	1700	1900	2100
CH temperature setting range	°C	45 ÷ 85	45 ÷ 85	45 ÷ 85	45 ÷ 85	45 ÷ 85
Maximum pressure of the heating circuit	bar	4	4	4	4	4
Flue gas discharge pipe diameter	mm	180	180	200	220	250
Power supply voltage/frequency	V/Hz	230/50	230/50	230/50	230/50	230/50
Maximum power consumption	W	20	20	20	20	20
Electric protection rating	IP	40	40	40	40	40

Maximum length of flue gas venting, see page 166

Item	Description	Code
	Remote control for thermoregulation control unit (temperature regulation), ErP VI class (87x87x31 mm)	0CREMOTO00
	Remote control for thermoregulation control unit, ErP V class (146x97x34 mm)	0CREMOTO01
	Daily timer kit (61.5 x 61.5 x 34.5 mm)	0KITBEST04
	Weekly timer kit (61.5 x 61.5 x 34.5 mm)	0KITBEST05
	External hot water storage tank kit for Altair RTN E - Altair RTN PVE - Altair RTFS E - Drago Dual	0KITBEST06

Item	Description	Code
	Kit for zone pumps	0KITPOMZ00
	Ext. heat. kit for Altair RTN E - Altair RTN PVE - Altair RTFS E - Drago Dual	0KITPOVA03
	Pump and vessel kit for Altair RTN E - Altair RTN PVE - Altair RTFS E - Drago Dualfor hot water storage tank	0KITPOVA04
	Hydraulic kit with pump and expansion tank - Altair RTN E - Altair RTN PVE - Altair RTFS E - Drago Dual	0KITPOVA05

For other accessories, see from page 165

ALTAIR RTN PVE

FLOOR STANDING BOILER WITH OPEN CHAMBER AND NATURAL DRAUGHT, CH ONLY
CIRCULATION PUMP AND EXPANSION VESSEL INCLUDED

- **Stainless steel atmospheric burner**
- **Electronic ignition and ionisation flame detection device**
- **Heat exchanger with cast iron elements**
- **CH circulation pump**
- **CH expansion vessel**
- Prearrangement for connection to the electric board (optional) for the remote management of a water heater (optional), and for the connection to the electric board (optional) for the management of three heating zones
- Control and management electric panel, CH circulation pump control, prearranged for connection to the ambient thermostat and to a water pressure switch
- Safety limit thermostat
- Safety flue gas thermostat

Available in the following models:

from 18 to 36

Model	Gas type	Code	Heat output (kW)	A x B x C	D	Gross weight (kg)
			Nominal Pn	mm	mm	
RTN PVE 18	NATURAL GAS	CATXX2MH18	18	450x850x525	110	125,5
	LPG	CATXX3MH18				
RTN PVE 24	NATURAL GAS	CATXX2MH24	24	450x850x525	130	125,5
	LPG	CATXX3MH24				
RTN PVE 32	NATURAL GAS	CATXX2MH32	31.5	450x850x625	130	159
	LPG	CATXX3MH32				
RTN PVE 36	NATURAL GAS	CATXX2MH36	36	450x850x625	130	159
	LPG	CATXX3MH36				

DIMENSIONS AND CONNECTION CENTRE DISTANCES

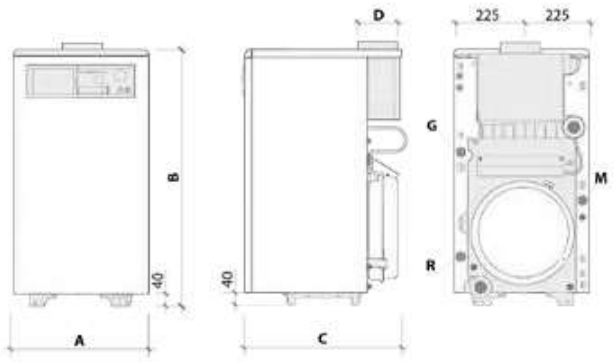

G Gas connection (3/4")
M Flow (3/4")
R Return (3/4")

Model	-	RTN PVE 18	RTN PVE 24	RTN PVE 32	RTN PVE 36
Type	-	B11BS	B11BS	B11BS	B11BS
Ignition	-	ELECTRONIC	ELECTRONIC	ELECTRONIC	ELECTRONIC
Heat exchanger number of elements	-	3	3	4	4
Nominal heat output (80-60°C) (Pn)	kW	18	24	31.5	36
Nominal heat input (Qn)	kW	20	26.6	34.4	39.2
Useful efficiency at nominal input (80-60°C)	%	89.6	90.9	90.9	90.83
Useful efficiency at 30% (30°C return)	%	89.2	91.1	89	90.75
Water capacity	l	10	10	13,4	13,4
Minimum water flow	l/h	400	520	680	770
CH temperature setting range	°C	45 ÷ 85	45 ÷ 85	45 ÷ 85	45 ÷ 85
Maximum pressure of the heating circuit	bar	3	3	3	3
Heating expansion vessel capacity	l	8	8	10	10
Flue gas discharge pipe diameter	mm	110	130	130	130
Power supply voltage/frequency	V/Hz	230/50	230/50	230/50	230/50
Maximum power consumption	W	110	110	110	110
Electric protection rating	IP	40	40	40	40

Maximum length of flue gas venting, see page 166

Item	Description	Code
	Remote control for thermoregulation control unit (temperature regulation), ErP VI class (87x87x31 mm)	0CREMOTO00
	Remote control for thermoregulation control unit, ErP V class (146x97x34 mm)	0CREMOTO01
	Daily timer kit (61.5 x 61.5 x 34.5 mm)	0KITBEST04
	Weekly timer kit (61.5 x 61.5 x 34.5 mm)	0KITBEST05

Item	Description	Code
	External hot water storage tank kit for Altair RTN E - Altair RTN PVE - Altair RTFS E - Drago Dual	0KITBEST06
	Thermoregulation control unit kit, ErP II class (143x97x74 mm)	0KITCEEL02
	Kit for zone pumps	0KITPOMZ00
	Ext. heat. kit for Altair RTN E - Altair RTN PVE - Altair RTFS E - Drago Dual	0KITPOVA03

For other accessories, see from page 165

ALTAIR RTN T

FLOOR STANDING BOILER WITH OPEN CHAMBER AND NATURAL DRAUGHT, CH ONLY OPERATION WITH NO POWER SUPPLY

- **Stainless steel atmospheric burner**
- **Piezoelectric ignition with permanent pilot**
- **Heat exchanger with cast iron elements**
- Safety limit thermostat
- Safety flue gas thermostat

Available in the following models:

24 32 48

Model	Gas type	Code	Heat output (kW)	A x B x C	D	Gross weight (kg)
			Nominal Pn	mm	mm	
RTN T 24	NATURAL GAS	CATXX2NB24	24	450x850x525	130	118
	LPG	CATXX3NB24				
RTN T 32	NATURAL GAS	CATXX2NB32	31,5	450x850x625	130	153,5
	LPG	CATXX3NB32				
RTN T 48	NATURAL GAS	CATXX2NB48	48	450x850x765	150	188,5
	LPG	CATXX3NB48				

DIMENSIONS AND CONNECTION CENTRE DISTANCES

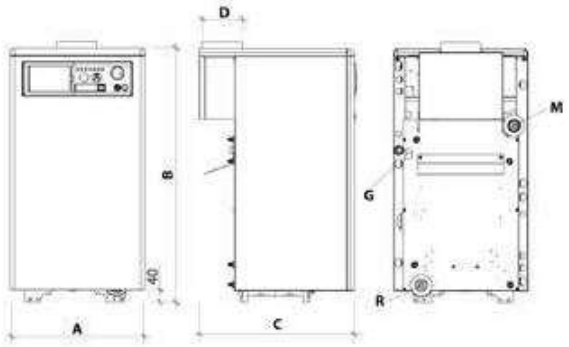

G Gas connection (3/4")
M Flow (1" 1/2)
R Return (1" 1/2)

Model	-	RTN T 24	RTN T 32	RTN T 48
Type	-	B11BS	B11BS	B11BS
Ignition	-	PIEZOELECTRIC	PIEZOELECTRIC	PIEZOELECTRIC
Heat exchanger number of elements	-	3	4	5
Nominal heat output (80-60°C) (Pn)	kW	24	31,5	48
Nominal heat input (Qn)	kW	26,6	34,4	52,8
Useful efficiency at nominal input (80-60°C)	%	90,9	90,9	91,84
Useful efficiency at 30% (30°C return)	%	91,1	89	90,4
Water capacity	l	10	13,4	16,8
Minimum water flow	l/h	520	680	1030
CH temperature setting range	°C	45 ÷ 85	45 ÷ 85	45 ÷ 85
Maximum pressure of the heating circuit	bar	4	4	4
Flue gas discharge pipe diameter	mm	130	130	150

Maximum length of flue gas venting, see page 166

ALTAIR RTFS E

FLOOR STANDING BOILER WITH SEALED CHAMBER AND FORCED DRAUGHT, CH ONLY

- **Stainless steel atmospheric burner**
- **Electronic ignition and ionisation flame detection device**
- **Heat exchanger with cast iron elements**
- Prearrangement for connection to the electric board (optional) for the remote management of a water heater (optional), and for the connection to the electric board (optional) for the management of three heating zones
- Control and management electric panel, CH circulation pump control, prearranged for connection to the ambient thermostat and to a water pressure switch
- Safety limit thermostat
- Safety flue gas thermostat

Available in the following models:

32 36

Model	Gas type	Code	Heat output (kW)	A x B x C	Gross weight (kg)
			Nominal Pn	mm	
RTFS E 32	NATURAL GAS	CATXX2MG32	32	450x850x610	169
	LPG	CATXX3MG32			
RTFS E 36	NATURAL GAS	CATXX2MG36	36,5	450x850x610	169
	LPG	CATXX3MG36			

DIMENSIONS AND CONNECTION CENTRE DISTANCES

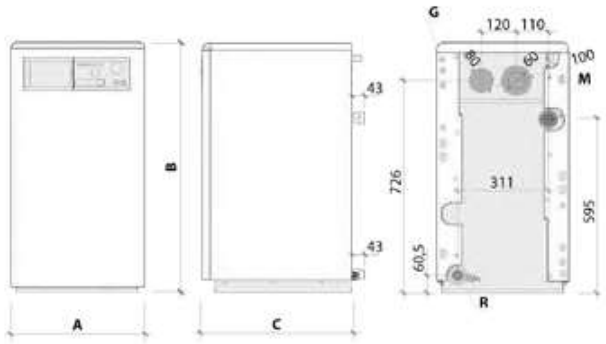

G Gas connection (1/2")
M Flow (1")
R Return (1")

Model	-	RTFS E 32	RTFS E 36
Type	-	C12, C32, C42, C52, C82	C12, C32, C42, C52, C82
Ignition	-	ELECTRONIC	ELECTRONIC
Heat exchanger number of elements	-	4	4
Nominal heat output (80-60°C) (Pn)	kW	32	36,5
Nominal heat input (Qn)	kW	34,4	39,2
Useful efficiency at nominal input (80-60°C)	%	93,1	93,1
Useful efficiency at 30% (30°C return)	%	92,08	92,14
Water capacity	l	13,4	13,4
Minimum water flow	l/h	690	780
CH temperature setting range	°C	45 ÷ 85	45 ÷ 85
Maximum pressure of the heating circuit	bar	4	4
Power supply voltage/frequency	V/Hz	230/50	230/50
Maximum power consumption	W	60	60
Electric protection rating	IP	40	40
Air intake/flue gas vent pipe diameter	mm	100/60 80+80	100/60 80+80

Maximum length of flue gas venting, see page 166

Item	Description	Code
	Remote control for thermoregulation control unit (temperature regulation), ErP VI class (87x87x31 mm)	0CREMOTO00
	Remote control for thermoregulation control unit, ErP V class (146x97x34 mm)	0CREMOTO01
	Daily timer kit (61.5 x 61.5 x 34.5 mm)	0KITBEST04
	Weekly timer kit (61.5 x 61.5 x 34.5 mm)	0KITBEST05
	External hot water storage tank kit for Altair RTN E - Altair RTN PVE - Altair RTFS E - Drago Dual	0KITBEST06
	Thermoregulation control unit kit, ErP II class (143x97x74 mm)	0KITCEEL02

Item	Description	Code
	Kit for zone pumps	0KITPOMZ00
	Ext. heat. kit for Altair RTN E - Altair RTN PVE - Altair RTFS E - Drago Dual	0KITPOVA03
	Pump and vessel kit for Altair RTN E - Altair RTN PVE - Altair RTFS E - Drago Dualfor hot water storage tank	0KITPOVA04
	Hydraulic kit with pump and expansion tank - Altair RTN E - Altair RTN PVE - Altair RTFS E - Drago Dual	0KITPOVA05
	Standard split pipe kit for Altair RTFS E	0SDOPPIA05

For other accessories, see from page 165

DRAGO DUAL

FLOOR STANDING BOILER
FOR OPERATION WITH DIESEL AND GAS FORCED DRAF BURNERS (OPTIONAL)

- **Control and management electric panel, CH circulation pump control, prearranged for connection to the ambient thermostat and to a water pressure switch**
- **Heat exchanger with three-pass fire-tube cast iron elements**
- **Easy maintenance**
- Prearrangement for connection to the electric board (optional) for the remote management of a water heater (optional), and for the connection to the electric board (optional) for the management of three heating zones
- Thick insulation against heat dissipation
- Safety limit thermostat
- Casing in powder coated electro-galvanised steel sheet

Available in the following models:

from 23 to 73

Model	Code	Heat output (kW)	L	M	R	Gross weight (Kg)
23	CDBXXGNB23	24	400	G 1 ¼	G 1	132,5
33	CDBXXGNB33	33	525	G 1 ¼	G 1	159,5
43	CDBXXGNB43	43	625	G 1 ¼	G 1	191
53	CDBXXGNB53	53	700	G 1 ¼	G 1	213
63	CDBXXGNB63	63	800	G 1 ¼	G 1	239
73	CDBXXGNB73	73	900	G 1 ¼	G 1	263,5

DIMENSIONS AND CONNECTION CENTRE DISTANCES

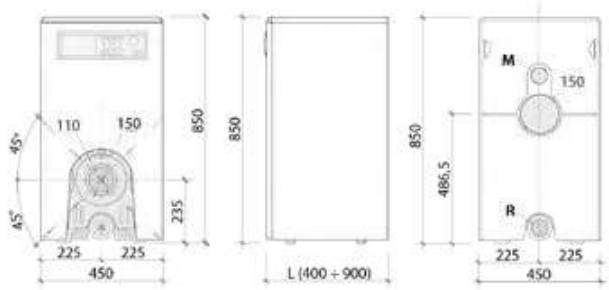

M Flow **R** Return

Technical specifications	um	23	33	43	53	63	73
Type	-	B23	B23	B23	B23	B23	B23
Nominal heat input (Qn)	kW	26,6	36,3	47,2	57,9	68,5	79,3
Nominal heat output (80-60°C) (Pn)	kW	24	33	43	53	63	73
Useful efficiency at nominal input (80-60°C)	%	90	91	91	91,5	92	92
Useful efficiency at 30% (30°C return)	%	89,7	90,7	90,7	91,1	91,6	91,6
CH temperature setting range	°C	49-82	49-82	49-82	49-82	49-82	49-82
Flue gas flow at nominal heat input	g/s	11,1	14,8	19,3	23,1	27,1	31,8
Power supply voltage/frequency	V/Hz	230/50	230/50	230/50	230/50	230/50	230/50
Electric protection rating	IP	40	40	40	40	40	40

Maximum length of flue gas venting, see page 166

Item	Description	Code
	Remote control for thermoregulation control unit (temperature regulation), ErP VI class (87x87x31 mm)	0CREMOTO00
	Remote control for thermoregulation control unit, ErP V class (146x97x34 mm)	0CREMOTO01
	Daily timer kit (61.5 x 61.5 x 34.5 mm)	0KITBEST04
	Weekly timer kit (61.5 x 61.5 x 34.5 mm)	0KITBEST05
	External hot water storage tank kit for Altair RTN E - Altair RTN PVE - Altair RTFS E - Drago Dual	0KITBEST06

Item	Description	Code
	Thermoregulation control unit kit, ErP II class (143x97x74 mm)	0KITCEEL02
	Kit for zone pumps	0KITPOMZ00
	Ext. heat. kit for Altair RTN E - Altair RTN PVE - Altair RTFS E - Drago Dual	0KITPOVA03
	Pump and vessel kit for Altair RTN E - Altair RTN PVE - Altair RTFS E - Drago Dualfor hot water storage tank	0KITPOVA04
	Hydraulic kit with pump and expansion tank - Altair RTN E - Altair RTN PVE - Altair RTFS E - Drago Dual	0KITPOVA05

For other accessories, see from page 165

FOR THE GAS CATEGORIES OF THE PRODUCTS CONTACT FONDITAL S.P.A.

TECHNICAL SPECIFICATIONS OF STANDARD BOILERS

Technical specifications	um	Virgo	Virgo	Virgo
Model	-	CTFS 24	CTFS 28	CTFS 32
Type	-	B22-C12-C32-C42-C52-C82-C12X	B22-C12-C32-C42-C52-C82-C12X	B22-C12-C32-C42-C52-C82-C12X
Nominal heat input (Qn)	kW	25,5	30,5	33,0
Reduced heat input (Qr)	kW	12,5	13,5	16,0
Nominal heat output (80-60°C) (Pn)	kW	23,7	28,6	30,8
Reduced heat output (80-60°C) (Pr)	kW	11,1	12,0	14,3
Useful efficiency at nominal input (80-60°C)	%	93,0	93,7	93,4
Useful efficiency at 30% (30°C return)	%	90,2	90,6	91,0
Heating circuit working pressure (min-max)	bar	0,5-3,0	0,5-3,0	0,5-3,0
CH temperature setting range	°C	35-78	35-78	35-78
CH maximum working temperature	°C	83	83	83
Heating expansion vessel capacity	l	7	7	7
DHW nominal heat input	kW	25,5	30,5	33,0
DHW minimum heat input	kW	12,5	13,5	16,0
DHW nominal heat output (ΔT 30°C)	kW	23,7	28,6	30,8
DHW minimum heat output (ΔT 30°C)	kW	11,1	12,0	14,3
DHW circuit working pressure (min-max)	bar	0,5-6,0	0,5-6,0	0,5-6,0
Specific DHW flow ΔT=30K	l/min	11,6	14,2	15,1
Qualification of domestic hot water	-	* * *	* * *	* * *
DHW temperature range	°C	35-57	35-57	35-57
DHW maximum working temperature	°C	62	62	62
NOx emission class	-	3	3	3
Casing heat loss with burner on at nominal heat input	%	1,05	0,76	1,37
Casing heat loss with burner off	%	0,26	0,20	0,20
Chimney heat loss with burner on at nominal heat input	%	5,97	5,54	5,23
Air-flue ΔT at nominal heat input	°C	95	101	105
Flue gas flow at nominal heat input	g/s	15,44	17,29	17,8
CO2 at nominal heat input of heating (Natural gas)	%	6,1	7,0	7,4
CO2 at nominal heat input of heating (Propane)	%	6,7	7,7	8,4
CO2 at nominal heat input of heating (Butane gas)	%	7,0	8,0	8,7
Power supply voltage/frequency	V/Hz	230/50	230/50	230/50
Maximum power consumption	W	122	134	134
Circulation pump power input	W	69	69	69
Electric protection rating	IP	X5D	X5D	X5D
Air intake/flue gas vent pipe diameter	mm	100/60 125/80 80+80	100/60 125/80 80+80	100/60 125/80 80+80

TECHNICAL SPECIFICATIONS OF STANDARD BOILERS

Technical specifications	um	Virgo	Virgo	Virgo
Model	-	RBTFS 24	RBTFS 28	RBTFS 32
Type	-	B22-C12-C32-C42-C52-C82-C12X	B22-C12-C32-C42-C52-C82-C12X	B22-C12-C32-C42-C52-C82-C12X
Nominal heat input (Qn)	kW	25,5	30,5	33,0
Reduced heat input (Qr)	kW	12,5	13,5	16,0
Nominal heat output (80-60°C) (Pn)	kW	23,7	28,6	30,8
Reduced heat output (80-60°C) (Pr)	kW	11,1	12,0	14,3
Useful efficiency at nominal input (80-60°C)	%	93,0	93,7	93,4
Useful efficiency at 30% (30°C return)	%	90,2	90,6	91,0
Heating circuit working pressure (min-max)	bar	0,5-3,0	0,5-3,0	0,5-3,0
CH temperature setting range	°C	35-78	35-78	35-78
CH maximum working temperature	°C	83	83	83
Heating expansion vessel capacity	l	7	7	7
NOx emission class	-	3	3	3
Casing heat loss with burner on at nominal heat input	%	1,05	0,76	1,37
Casing heat loss with burner off	%	0,26	0,20	0,20
Chimney heat loss with burner on at nominal heat input	%	5,97	5,54	5,23
Air-flue ΔT at nominal heat input	°C	95	101	105
Flue gas flow at nominal heat input	g/s	15,44	17,29	17,8
CO2 at nominal heat input of heating (Natural gas)	%	6,1	7,0	7,4
CO2 at nominal heat input of heating (Propane)	%	6,7	7,7	8,4
CO2 at nominal heat input of heating (Butane gas)	%	7,0	8,0	8,7
Power supply voltage/frequency	V/Hz	230/50	230/50	230/50
Maximum power consumption	W	122	134	134
Circulation pump power input	W	69	69	69
Electric protection rating	IP	X5D	X5D	X5D
Air intake/flue gas vent pipe diameter	mm	100/60 125/80 80+80	100/60 125/80 80+80	100/60 125/80 80+80

TECHNICAL SPECIFICATIONS OF STANDARD BOILERS

Technical specifications	um	Virgo	Virgo	Virgo
Model	-	RTFS 24	RTFS 28	RTFS 32
Type	-	B22-C12-C32-C42-C52-C82-C12X	B22-C12-C32-C42-C52-C82-C12X	B22-C12-C32-C42-C52-C82-C12X
Nominal heat input (Qn)	kW	25,5	30,5	33,0
Reduced heat input (Qr)	kW	12,5	13,5	16,0
Nominal heat output (80-60°C) (Pn)	kW	23,7	28,6	30,8
Reduced heat output (80-60°C) (Pr)	kW	11,1	12,0	14,3
Useful efficiency at nominal input (80-60°C)	%	93,0	93,7	93,4
Useful efficiency at 30% (30°C return)	%	90,2	90,6	91,0
Heating circuit working pressure (min-max)	bar	0,5-3,0	0,5-3,0	0,5-3,0
CH temperature setting range	°C	35-78	35-78	35-78
CH maximum working temperature	°C	83	83	83
Heating expansion vessel capacity	l	7	7	7
NOx emission class	-	3	3	3
Casing heat loss with burner on at nominal heat input	%	1,05	0,76	1,37
Casing heat loss with burner off	%	0,26	0,20	0,20
Chimney heat loss with burner on at nominal heat input	%	5,97	5,54	5,23
Air-flue ΔT at nominal heat input	°C	95	101	105
Flue gas flow at nominal heat input	g/s	15,44	17,29	17,8
CO2 at nominal heat input of heating (Natural gas)	%	6,1	7,0	7,4
CO2 at nominal heat input of heating (Propane)	%	6,7	7,7	8,4
CO2 at nominal heat input of heating (Butane gas)	%	7,0	8,0	8,7
Power supply voltage/frequency	V/Hz	230/50	230/50	230/50
Maximum power consumption	W	122	134	134
Circulation pump power input	W	69	69	69
Electric protection rating	IP	X5D	X5D	X5D
Air intake/flue gas vent pipe diameter	mm	100/60 125/80 80+80	100/60 125/80 80+80	100/60 125/80 80+80

TECHNICAL SPECIFICATIONS OF STANDARD BOILERS

Technical specifications	um	Virgo	Virgo	Virgo
Model	-	CTFS 24	CTFS 28	CTFS 32
Type	-	B22-C12-C32-C42-C52-C82-C12X	B22-C12-C32-C42-C52-C82-C12X	B22-C12-C32-C42-C52-C82-C12X
Nominal heat input (Qn)	kW	25,5	30,5	33,0
Reduced heat input (Qr)	kW	12,5	13,5	16,0
Nominal heat output (80-60°C) (Pn)	kW	23,7	28,6	30,8
Reduced heat output (80-60°C) (Pr)	kW	11,1	12,0	14,3
Useful efficiency at nominal input (80-60°C)	%	93,0	93,7	93,4
Useful efficiency at 30% (30°C return)	%	90,2	90,6	91,0
Heating circuit working pressure (min-max)	bar	0,5-3,0	0,5-3,0	0,5-3,0
CH temperature setting range	°C	35-78	35-78	35-78
CH maximum working temperature	°C	83	83	83
Heating expansion vessel capacity	l	7	7	7
DHW nominal heat input	kW	25,5	30,5	33,0
DHW minimum heat input	kW	12,5	13,5	16,0
DHW nominal heat output (ΔT 30°C)	kW	23,7	28,6	30,8
DHW minimum heat output (ΔT 30°C)	kW	11,1	12,0	14,3
DHW circuit working pressure (min-max)	bar	0,5-6,0	0,5-6,0	0,5-6,0
Specific DHW flow ΔT=30K	l/min	11,6	14,2	15,1
DHW temperature range	°C	35-57	35-57	35-57
DHW maximum working temperature	°C	62	62	62
NOx emission class	-	3	3	3
Casing heat loss with burner on at nominal heat input	%	1,05	0,76	1,37
Casing heat loss with burner off	%	0,26	0,20	0,20
Chimney heat loss with burner on at nominal heat input	%	5,97	5,54	5,23
Air-flue ΔT at nominal heat input	°C	95	101	105
Flue gas flow at nominal heat input	g/s	15,44	17,29	17,8
CO2 at nominal heat input of heating (Natural gas)	%	6,1	7,0	7,4
CO2 at nominal heat input of heating (Propane)	%	6,7	7,7	8,4
CO2 at nominal heat input of heating (Butane gas)	%	7,0	8,0	8,7
Power supply voltage/frequency	V/Hz	230/50	230/50	230/50
Maximum power consumption	W	125	134	134
Circulation pump power input	W	69	69	69
Electric protection rating	IP	X5D	X5D	X5D
Air intake/flue gas vent pipe diameter	mm	100/60 125/80 80+80	100/60 125/80 80+80	100/60 125/80 80+80

TECHNICAL SPECIFICATIONS OF STANDARD BOILERS

Technical specifications	um	Virgo	Virgo
Model	-	CTN 24	CTN 28
Type	-	B11BS	B11BS
Nominal heat input (Qn)	kW	25,5	30,5
Reduced heat input (Qr)	kW	10,0	12,5
Nominal heat output (80-60°C) (Pn)	kW	23,1	27,4
Reduced heat output (80-60°C) (Pr)	kW	8,5	10,8
Useful efficiency at nominal input (80-60°C)	%	90,6	90,0
Useful efficiency at 30% (30°C return)	%	89,4	87,8
Heating circuit working pressure (min-max)	bar	0,5-3,0	0,5-3,0
CH temperature setting range	°C	35-78	35-78
CH maximum working temperature	°C	83	83
Heating expansion vessel capacity	l	7	7
DHW nominal heat input	kW	25,5	30,5
DHW minimum heat input	kW	10,0	12,5
DHW nominal heat output (ΔT 30°C)	kW	23,1	27,4
DHW minimum heat output (ΔT 30°C)	kW	8,5	10,8
DHW circuit working pressure (min-max)	bar	0,5-6,0	0,5-6,0
Specific DHW flow ΔT=30K	l/min	11,2	13,5
DHW temperature range	°C	35-57	35-57
DHW maximum working temperature	°C	62	62
NOx emission class	-	2	2
Casing heat loss with burner on at nominal heat input	%	1,88	2,83
Casing heat loss with burner off	%	0,55	0,55
Chimney heat loss with burner on at nominal heat input	%	7,52	7,17
Air-flue ΔT at nominal heat input	°C	86	96
Flue gas flow at nominal heat input	g/s	20,73	21,7
CO2 at nominal heat input of heating (Natural gas)	%	4,9	5,5
CO2 at nominal heat input of heating (Propane)	%	5,6	6,5
CO2 at nominal heat input of heating (Butane gas)	%	5,8	6,5
Power supply voltage/frequency	V/Hz	230/50	230/50
Maximum power consumption	W	86	86
Circulation pump power input	W	69	69
Electric protection rating	IP	X5D	X5D

TECHNICAL SPECIFICATIONS OF STANDARD BOILERS

Technical specifications	um	Virgo	Virgo	Virgo
Model	-	RBTFS 24	RBTFS 28	RBTFS 32
Type	-	B22-C12-C32-C42-C52-C82-C12X	B22-C12-C32-C42-C52-C82-C12X	B22-C12-C32-C42-C52-C82-C12X
Nominal heat input (Qn)	kW	25,5	30,5	33,0
Reduced heat input (Qr)	kW	12,5	13,5	16,0
Nominal heat output (80-60°C) (Pn)	kW	23,7	28,6	30,8
Reduced heat output (80-60°C) (Pr)	kW	11,1	12,0	14,3
Useful efficiency at nominal input (80-60°C)	%	93,0	93,7	93,4
Useful efficiency at 30% (30°C return)	%	90,2	90,6	91,0
Heating circuit working pressure (min-max)	bar	0,5-3,0	0,5-3,0	0,5-3,0
CH temperature setting range	°C	35-78	35-78	35-78
CH maximum working temperature	°C	83	83	83
Heating expansion vessel capacity	l	7	7	7
NOx emission class	-	3	3	3
Casing heat loss with burner on at nominal heat input	%	1,05	0,76	1,37
Casing heat loss with burner off	%	0,26	0,20	0,20
Chimney heat loss with burner on at nominal heat input	%	5,97	5,54	5,23
Air-flue ΔT at nominal heat input	°C	95	101	105
Flue gas flow at nominal heat input	g/s	15,44	17,29	17,8
CO2 at nominal heat input of heating (Natural gas)	%	6,1	7,0	7,4
CO2 at nominal heat input of heating (Propane)	%	6,7	7,7	8,4
CO2 at nominal heat input of heating (Butane gas)	%	7,0	8,0	8,7
Power supply voltage/frequency	V/Hz	230/50	230/50	230/50
Maximum power consumption	W	125	134	134
Circulation pump power input	W	69	69	69
Electric protection rating	IP	X5D	X5D	X5D
Air intake/flue gas vent pipe diameter	mm	100/60 125/80 80+80	100/60 125/80 80+80	100/60 125/80 80+80

TECHNICAL SPECIFICATIONS OF STANDARD BOILERS

Technical specifications	um	Virgo	Virgo
Model	-	RBTN 24	RBTN 28
Type	-	B11BS	B11BS
Nominal heat input (Qn)	kW	25,5	30,5
Reduced heat input (Qr)	kW	10,0	12,5
Nominal heat output (80-60°C) (Pn)	kW	23,1	27,4
Reduced heat output (80-60°C) (Pr)	kW	8,5	10,8
Useful efficiency at nominal input (80-60°C)	%	90,6	90,0
Useful efficiency at 30% (30°C return)	%	89,4	87,8
Heating circuit working pressure (min-max)	bar	0,5-3,0	0,5-3,0
CH temperature setting range	°C	35-78	35-78
CH maximum working temperature	°C	83	83
Heating expansion vessel capacity	l	7	7
NOx emission class	-	2	2
Casing heat loss with burner on at nominal heat input	%	1,88	2,83
Casing heat loss with burner off	%	0,55	0,55
Chimney heat loss with burner on at nominal heat input	%	7,52	7,17
Air-flue ΔT at nominal heat input	°C	86	96
Flue gas flow at nominal heat input	g/s	20,73	21,7
CO2 at nominal heat input of heating (Natural gas)	%	4,9	5,5
CO2 at nominal heat input of heating (Propane)	%	5,6	6,5
CO2 at nominal heat input of heating (Butane gas)	%	5,8	6,5
Power supply voltage/frequency	V/Hz	230/50	230/50
Maximum power consumption	W	86	86
Circulation pump power input	W	69	69
Electric protection rating	IP	X5D	X5D

TECHNICAL SPECIFICATIONS OF STANDARD BOILERS

Technical specifications	um	Virgo	Virgo	Virgo
Model	-	RTFS 24	RTFS 28	RTFS 32
Type	-	B22-C12-C32-C42-C52-C82-C12X	B22-C12-C32-C42-C52-C82-C12X	B22-C12-C32-C42-C52-C82-C12X
Nominal heat input (Qn)	kW	25,5	30,5	33,0
Reduced heat input (Qr)	kW	12,5	13,5	16,0
Nominal heat output (80-60°C) (Pn)	kW	23,7	28,6	30,8
Reduced heat output (80-60°C) (Pr)	kW	11,1	12,0	14,3
Useful efficiency at nominal input (80-60°C)	%	93,0	93,7	93,4
Useful efficiency at 30% (30°C return)	%	90,2	90,6	91,0
Heating circuit working pressure (min-max)	bar	0,5-3,0	0,5-3,0	0,5-3,0
CH temperature setting range	°C	35-78	35-78	35-78
CH maximum working temperature	°C	83	83	83
Heating expansion vessel capacity	l	7	7	7
NOx emission class	-	3	3	3
Casing heat loss with burner on at nominal heat input	%	1,05	0,76	1,37
Casing heat loss with burner off	%	0,26	0,20	0,20
Chimney heat loss with burner on at nominal heat input	%	5,97	5,54	5,23
Air-flue ΔT at nominal heat input	°C	95	101	105
Flue gas flow at nominal heat input	g/s	15,44	17,29	17,8
CO2 at nominal heat input of heating (Natural gas)	%	6,1	7,0	7,4
CO2 at nominal heat input of heating (Propane)	%	6,7	7,7	8,4
CO2 at nominal heat input of heating (Butane gas)	%	7,0	8,0	8,7
Power supply voltage/frequency	V/Hz	230/50	230/50	230/50
Maximum power consumption	W	125	134	134
Circulation pump power input	W	69	69	69
Electric protection rating	IP	X5D	X5D	X5D
Air intake/flue gas vent pipe diameter	mm	100/60 125/80 80+80	100/60 125/80 80+80	100/60 125/80 80+80

TECHNICAL SPECIFICATIONS OF STANDARD BOILERS

Technical specifications	um	Virgo	Virgo
Model	-	RTN 24	RTN 28
Type	-	B11BS	B11BS
Nominal heat input (Qn)	kW	25,5	30,5
Reduced heat input (Qr)	kW	10,0	12,5
Nominal heat output (80-60°C) (Pn)	kW	23,1	27,4
Reduced heat output (80-60°C) (Pr)	kW	8,5	10,8
Useful efficiency at nominal input (80-60°C)	%	90,6	90,0
Useful efficiency at 30% (30°C return)	%	89,4	87,8
Heating circuit working pressure (min-max)	bar	0,5-3,0	0,5-3,0
CH temperature setting range	°C	35-78	35-78
CH maximum working temperature	°C	83	83
Heating expansion vessel capacity	l	7	7
NOx emission class	-	2	2
Casing heat loss with burner on at nominal heat input	%	1,88	2,83
Casing heat loss with burner off	%	0,55	0,55
Chimney heat loss with burner on at nominal heat input	%	7,52	7,17
Air-flue ΔT at nominal heat input	°C	86	96
Flue gas flow at nominal heat input	g/s	20,73	21,7
CO2 at nominal heat input of heating (Natural gas)	%	4,9	5,5
CO2 at nominal heat input of heating (Propane)	%	5,6	6,5
CO2 at nominal heat input of heating (Butane gas)	%	5,8	6,5
Power supply voltage/frequency	V/Hz	230/50	230/50
Maximum power consumption	W	86	86
Circulation pump power input	W	69	69
Electric protection rating	IP	X5D	X5D

TECHNICAL SPECIFICATIONS OF STANDARD BOILERS

Technical specifications	um	Delfis
Model	-	CTN 24 AF
Type	-	B11BS
Nominal heat input (Qn)	kW	24,5
Reduced heat input (Qr)	kW	12,0
Nominal heat output (80-60°C) (Pn)	kW	22,1
Reduced heat output (80-60°C) (Pr)	kW	10,5
Useful efficiency at nominal input (80-60°C)	%	90,1
Useful efficiency at 30% (30°C return)	%	89,2
Heating circuit working pressure (min-max)	bar	0,5-3,0
CH temperature setting range	°C	35-78
CH maximum working temperature	°C	83
Heating expansion vessel capacity	l	7
DHW nominal heat input	kW	24,5
DHW minimum heat input	kW	12,0
DHW nominal heat output (ΔT 30°C)	kW	22,1
DHW minimum heat output (ΔT 30°C)	kW	10,5
DHW circuit working pressure (min-max)	bar	0,5-8,0
Specific DHW flow ΔT=25K	l/min	12,4
DHW temperature range	°C	35-50
DHW maximum working temperature	°C	58
NOx emission class	-	2
Casing heat loss with burner on at nominal heat input	%	3,92
Casing heat loss with burner off	%	0,48
Chimney heat loss with burner on at nominal heat input	%	5,98
Air-flue ΔT at nominal heat input	°C	83
Flue gas flow at nominal heat input	g/s	16,72
CO2 at nominal heat input of heating (Natural gas)	%	5,7
CO2 at nominal heat input of heating (Propane)	%	7,3
CO2 at nominal heat input of heating (Butane gas)	%	6,7
Power supply voltage/frequency	V/Hz	230/50
Maximum power consumption	W	73
Circulation pump power input	W	66
Electric protection rating	IP	X4D

TECHNICAL SPECIFICATIONS OF STANDARD BOILERS

Technical specifications	um	Delfis
Model	-	CTFS 24 AF
Type	-	B22-C12-C32-C42-C52-C82-C12X
Nominal heat input (Qn)	kW	25,5
Reduced heat input (Qr)	kW	12,5
Nominal heat output (80-60°C) (Pn)	kW	23,7
Reduced heat output (80-60°C) (Pr)	kW	11,0
Useful efficiency at nominal input (80-60°C)	%	93,1
Useful efficiency at 30% (30°C return)	%	90,5
Heating circuit working pressure (min-max)	bar	0,5-3,0
CH temperature setting range	°C	35-78
CH maximum working temperature	°C	83
Heating expansion vessel capacity	l	7
DHW nominal heat input	kW	25,5
DHW minimum heat input	kW	12,5
DHW nominal heat output (ΔT 30°C)	kW	23,7
DHW minimum heat output (ΔT 30°C)	kW	11,0
DHW circuit working pressure (min-max)	bar	0,5-8,0
Specific DHW flow ΔT=25K	l/min	13,3
DHW temperature range	°C	35-50
DHW maximum working temperature	°C	58
NOx emission class	-	3
Casing heat loss with burner on at nominal heat input	%	1,01
Casing heat loss with burner off	%	0,23
Chimney heat loss with burner on at nominal heat input	%	5,89
Air-flue ΔT at nominal heat input	°C	110
Flue gas flow at nominal heat input	g/s	14,18
CO2 at nominal heat input of heating (Natural gas)	%	7,2
CO2 at nominal heat input of heating (Propane)	%	6,8
CO2 at nominal heat input of heating (Butane gas)	%	8,6
Power supply voltage/frequency	V/Hz	230/50
Maximum power consumption	W	104
Circulation pump power input	W	66
Electric protection rating	IP	X4D
Air intake/flue gas vent pipe diameter	mm	100/60 125/80 80+80

TECHNICAL SPECIFICATIONS OF STANDARD BOILERS

Technical specifications	um	Delfis
Model	-	CTN 24
Type	-	B11BS
Nominal heat input (Qn)	kW	24,5
Reduced heat input (Qr)	kW	12,0
Nominal heat output (80-60°C) (Pn)	kW	22,07
Reduced heat output (80-60°C) (Pr)	kW	10,46
Useful efficiency at nominal input (80-60°C)	%	90,1
Useful efficiency at 30% (30°C return)	%	88,45
Heating circuit working pressure (min-max)	bar	0,5-3,0
CH temperature setting range	°C	35-78
CH maximum working temperature	°C	83
Heating expansion vessel capacity	l	7
DHW nominal heat input	kW	24,5
DHW minimum heat input	kW	12,0
DHW nominal heat output (ΔT 30°C)	kW	22,07
DHW minimum heat output (ΔT 30°C)	kW	10,46
DHW circuit working pressure (min-max)	bar	0,5-8,0
Specific DHW flow ΔT=25K	l/min	12,7
DHW temperature range	°C	35-57
DHW maximum working temperature	°C	62
NOx emission class	-	2
Casing heat loss with burner on at nominal heat input	%	3,04
Casing heat loss with burner off	%	0,61
Chimney heat loss with burner on at nominal heat input	%	6,86
Air-flue ΔT at nominal heat input	°C	83
Flue gas flow at nominal heat input	g/s	16,72
CO2 at nominal heat input of heating (Natural gas)	%	5,7
CO2 at nominal heat input of heating (Propane)	%	7,3
CO2 at nominal heat input of heating (Butane gas)	%	6,7
Power supply voltage/frequency	V/Hz	230/50
Maximum power consumption	W	73
Circulation pump power input	W	66
Electric protection rating	IP	X4D

TECHNICAL SPECIFICATIONS OF STANDARD BOILERS

Technical specifications	um	Delfis
Model	-	RBTN 24
Type	-	B11BS
Nominal heat input (Qn)	kW	24,5
Reduced heat input (Qr)	kW	12,0
Nominal heat output (80-60°C) (Pn)	kW	22,07
Reduced heat output (80-60°C) (Pr)	kW	10,46
Useful efficiency at nominal input (80-60°C)	%	90,1
Useful efficiency at 30% (30°C return)	%	88,45
Heating circuit working pressure (min-max)	bar	0,5-3,0
CH temperature setting range	°C	35-78
CH maximum working temperature	°C	83
Heating expansion vessel capacity	l	7
NOx emission class	-	2
Casing heat loss with burner on at nominal heat input	%	3,04
Casing heat loss with burner off	%	0,61
Chimney heat loss with burner on at nominal heat input	%	6,86
Air-flue ΔT at nominal heat input	°C	83
Flue gas flow at nominal heat input	g/s	16,72
CO2 at nominal heat input of heating (Natural gas)	%	5,7
CO2 at nominal heat input of heating (Propane)	%	7,3
CO2 at nominal heat input of heating (Butane gas)	%	6,7
Power supply voltage/frequency	V/Hz	230/50
Maximum power consumption	W	73
Circulation pump power input	W	66
Electric protection rating	IP	X4D

TECHNICAL SPECIFICATIONS OF STANDARD BOILERS

Technical specifications	um	Delfis
Model	-	CTFS 24
Type	-	B22-C12-C32-C42-C52-C82-C12X
Nominal heat input (Qn)	kW	25,5
Reduced heat input (Qr)	kW	12,5
Nominal heat output (80-60°C) (Pn)	kW	23,7
Reduced heat output (80-60°C) (Pr)	kW	11,1
Useful efficiency at nominal input (80-60°C)	%	93,0
Useful efficiency at 30% (30°C return)	%	90,4
Heating circuit working pressure (min-max)	bar	0,5-3,0
CH temperature setting range	°C	35-78
CH maximum working temperature	°C	83
Heating expansion vessel capacity	l	7
DHW nominal heat input	kW	25,5
DHW minimum heat input	kW	12,5
DHW nominal heat output (ΔT 30°C)	kW	23,7
DHW minimum heat output (ΔT 30°C)	kW	11,0
DHW circuit working pressure (min-max)	bar	0,5-8,0
Specific DHW flow ΔT=25K	l/min	13,3
DHW temperature range	°C	35-57
DHW maximum working temperature	°C	62
NOx emission class	-	2
Casing heat loss with burner on at nominal heat input	%	1,01
Casing heat loss with burner off	%	0,23
Chimney heat loss with burner on at nominal heat input	%	5,89
Air-flue ΔT at nominal heat input	°C	98
Flue gas flow at nominal heat input	g/s	14,18
CO2 at nominal heat input of heating (Natural gas)	%	6,8
CO2 at nominal heat input of heating (Propane)	%	7,7
CO2 at nominal heat input of heating (Butane gas)	%	8,0
Power supply voltage/frequency	V/Hz	230/50
Maximum power consumption	W	104
Circulation pump power input	W	66
Electric protection rating	IP	X4D
Air intake/flue gas vent pipe diameter	mm	100/60 125/80 80+80

TECHNICAL SPECIFICATIONS OF STANDARD BOILERS

Technical specifications	um	Delfis
Model	-	RTFS 24
Type	-	B22-C12-C32-C42-C52-C82-C12X
Nominal heat input (Qn)	kW	25,5
Reduced heat input (Qr)	kW	12,5
Nominal heat output (80-60°C) (Pn)	kW	23,7
Reduced heat output (80-60°C) (Pr)	kW	11,1
Useful efficiency at nominal input (80-60°C)	%	93,0
Useful efficiency at 30% (30°C return)	%	90,4
Heating circuit working pressure (min-max)	bar	0,5-3,0
CH temperature setting range	°C	35-78
CH maximum working temperature	°C	83
Heating expansion vessel capacity	l	7
NOx emission class	-	2
Casing heat loss with burner on at nominal heat input	%	1,01
Casing heat loss with burner off	%	0,23
Chimney heat loss with burner on at nominal heat input	%	5,89
Air-flue ΔT at nominal heat input	°C	98
Flue gas flow at nominal heat input	g/s	14,18
CO2 at nominal heat input of heating (Natural gas)	%	6,8
CO2 at nominal heat input of heating (Propane)	%	7,7
CO2 at nominal heat input of heating (Butane gas)	%	8,0
Power supply voltage/frequency	V/Hz	230/50
Maximum power consumption	W	104
Circulation pump power input	W	66
Electric protection rating	IP	X4D
Air intake/flue gas vent pipe diameter	mm	100/60 125/80 80+80

TECHNICAL SPECIFICATIONS OF STANDARD BOILERS

Technical specifications	um	Delfis
Model	-	RBTFS 24
Type	-	B22-C12-C32-C42-C52-C82-C12X
Nominal heat input (Qn)	kW	25,5
Reduced heat input (Qr)	kW	12,5
Nominal heat output (80-60°C) (Pn)	kW	23,7
Reduced heat output (80-60°C) (Pr)	kW	11,1
Useful efficiency at nominal input (80-60°C)	%	93,0
Useful efficiency at 30% (30°C return)	%	90,4
Heating circuit working pressure (min-max)	bar	0,5-3,0
CH temperature setting range	°C	35-78
CH maximum working temperature	°C	83
Heating expansion vessel capacity	l	7
NOx emission class	-	2
Casing heat loss with burner on at nominal heat input	%	1,01
Casing heat loss with burner off	%	0,23
Chimney heat loss with burner on at nominal heat input	%	5,89
Air-flue ΔT at nominal heat input	°C	98
Flue gas flow at nominal heat input	g/s	14,18
CO2 at nominal heat input of heating (Natural gas)	%	6,8
CO2 at nominal heat input of heating (Propane)	%	7,7
CO2 at nominal heat input of heating (Butane gas)	%	8,0
Power supply voltage/frequency	V/Hz	230/50
Maximum power consumption	W	104
Circulation pump power input	W	66
Electric protection rating	IP	X4D
Air intake/flue gas vent pipe diameter	mm	100/60 125/80 80+80

TECHNICAL SPECIFICATIONS OF STANDARD BOILERS

Technical specifications	um	Delfis
Model	-	CTFS 40
Type	-	B22-C12- C32-C42- C52-C62- C82-C12X
Nominal heat input (Qn)	kW	41,0
Reduced heat input (Qr)	kW	15,0
Nominal heat output (80-60°C) (Pn)	kW	38,0
Reduced heat output (80-60°C) (Pr)	kW	12,9
Useful efficiency at nominal input (80-60°C)	%	92,7
Useful efficiency at 30% (30°C return)	%	89,4
Heating circuit working pressure (min-max)	bar	0,5-3,0
CH temperature setting range	°C	35-78
CH maximum working temperature	°C	83
Heating expansion vessel capacity	l	10
DHW nominal heat input	kW	41,0
DHW minimum heat input	kW	15,0
DHW nominal heat output (ΔT 30°C)	kW	38,0
DHW minimum heat output (ΔT 30°C)	kW	12,9
DHW circuit working pressure (min-max)	bar	0,5-6,0
Specific DHW flow ΔT=25K	l/min	22,2
DHW temperature range	°C	35-57
DHW maximum working temperature	°C	62
NOx emission class	-	3
Casing heat loss with burner on at nominal heat input	%	1,82
Casing heat loss with burner off	%	0,17
Chimney heat loss with burner on at nominal heat input	%	5,48
Air-flue ΔT at nominal heat input	°C	96,5
Flue gas flow at nominal heat input	g/s	26,7
CO2 at nominal heat input of heating (Natural gas)	%	6,6
CO2 at nominal heat input of heating (Propane)	%	7,8
CO2 at nominal heat input of heating (Butane gas)	%	7,8
Power supply voltage/frequency	V/Hz	230/50
Maximum power consumption	W	157
Circulation pump power input	W	73
Electric protection rating	IP	X4D
Air intake/flue gas vent pipe diameter	mm	100/60 125/80 80+80

TECHNICAL SPECIFICATIONS OF STANDARD BOILERS

Technical specifications	um	Delfis
Model	-	RTFS 40
Type	-	B22-C12-C32-C42-C52-C62-C82-C12X
Nominal heat input (Qn)	kW	41,0
Reduced heat input (Qr)	kW	15,0
Nominal heat output (80-60°C) (Pn)	kW	38,0
Reduced heat output (80-60°C) (Pr)	kW	12,9
Useful efficiency at nominal input (80-60°C)	%	92,7
Useful efficiency at 30% (30°C return)	%	89,4
Heating circuit working pressure (min-max)	bar	0,5-3,0
CH temperature setting range	°C	35-78
CH maximum working temperature	°C	83
NOx emission class	-	3
Casing heat loss with burner on at nominal heat input	%	1,82
Casing heat loss with burner off	%	0,17
Chimney heat loss with burner on at nominal heat input	%	5,48
Air-flue ΔT at nominal heat input	°C	96,5
Flue gas flow at nominal heat input	g/s	26,7
CO2 at nominal heat input of heating (Natural gas)	%	6,6
CO2 at nominal heat input of heating (Propane)	%	7,8
CO2 at nominal heat input of heating (Butane gas)	%	7,8
Power supply voltage/frequency	V/Hz	230/50
Maximum power consumption	W	157
Circulation pump power input	W	73
Electric protection rating	IP	X4D
Air intake/flue gas vent pipe diameter	mm	100/60 125/80 80+80

TECHNICAL SPECIFICATIONS OF STANDARD BOILERS

Technical specifications	um	Delfis
Model	-	RBTFS 40
Type	-	B22-C12- C32-C42- C52-C62- C82-C12X
Nominal heat input (Qn)	kW	41,0
Reduced heat input (Qr)	kW	15,0
Nominal heat output (80-60°C) (Pn)	kW	38,0
Reduced heat output (80-60°C) (Pr)	kW	12,9
Useful efficiency at nominal input (80-60°C)	%	92,7
Useful efficiency at 30% (30°C return)	%	89,4
Heating circuit working pressure (min-max)	bar	0,5-3,0
CH temperature setting range	°C	35-78
CH maximum working temperature	°C	83
NOx emission class	-	3
Casing heat loss with burner on at nominal heat input	%	1,82
Casing heat loss with burner off	%	0,17
Chimney heat loss with burner on at nominal heat input	%	5,48
Air-flue ΔT at nominal heat input	°C	96,5
Flue gas flow at nominal heat input	g/s	26,7
CO2 at nominal heat input of heating (Natural gas)	%	6,6
CO2 at nominal heat input of heating (Propane)	%	7,8
CO2 at nominal heat input of heating (Butane gas)	%	7,8
Power supply voltage/frequency	V/Hz	230/50
Maximum power consumption	W	157
Circulation pump power input	W	73
Electric protection rating	IP	X4D
Air intake/flue gas vent pipe diameter	mm	100/60 125/80 80+80

TECHNICAL SPECIFICATIONS OF STANDARD BOILERS

Technical specifications	um	Vega	Vega	Vega
Model	-	CTFS 24	CTFS 28	CTFS 32
Type	-	B22-C12-C32-C42-C52-C82-C12X	B22-C12-C32-C42-C52-C82-C12X	B22-C12-C32-C42-C52-C82-C12X
Nominal heat input (Qn)	kW	25,5	30,5	33,0
Reduced heat input (Qr)	kW	12,5	13,5	16,0
Nominal heat output (80-60°C) (Pn)	kW	23,7	28,6	30,8
Reduced heat output (80-60°C) (Pr)	kW	11,1	12,0	14,3
Useful efficiency at nominal input (80-60°C)	%	93,0	93,7	93,4
Useful efficiency at 30% (30°C return)	%	90,2	90,6	91,0
Heating circuit working pressure (min-max)	bar	0,5-3,0	0,5-3,0	0,5-3,0
CH temperature setting range	°C	35-78	35-78	35-78
CH maximum working temperature	°C	83	83	83
Heating expansion vessel capacity	l	7	7	7
DHW nominal heat input	kW	25,5	30,5	33,0
DHW minimum heat input	kW	12,5	13,5	16,0
DHW nominal heat output (ΔT 30°C)	kW	23,7	28,6	30,8
DHW minimum heat output (ΔT 30°C)	kW	11,1	12,0	14,3
DHW circuit working pressure (min-max)	bar	0,5-6,0	0,5-6,0	0,5-6,0
Specific DHW flow ΔT=30K	l/min	11,6	14,2	15,1
DHW temperature range	°C	35-57	35-57	35-57
DHW maximum working temperature	°C	62	62	62
NOx emission class	-	3	3	3
Casing heat loss with burner on at nominal heat input	%	1,05	0,76	1,37
Casing heat loss with burner off	%	0,26	0,20	0,20
Chimney heat loss with burner on at nominal heat input	%	5,97	5,54	5,23
Air-flue ΔT at nominal heat input	°C	95	101	105
Flue gas flow at nominal heat input	g/s	15,44	17,29	17,8
CO2 at nominal heat input of heating (Natural gas)	%	6,1	7,0	7,4
CO2 at nominal heat input of heating (Propane)	%	6,7	7,7	8,4
CO2 at nominal heat input of heating (Butane gas)	%	7,0	8,0	8,7
Power supply voltage/frequency	V/Hz	230/50	230/50	230/50
Maximum power consumption	W	132	145	145
Circulation pump power input	W	90	90	90
Electric protection rating	IP	X4D	X4D	X4D
Air intake/flue gas vent pipe diameter	mm	100/60 125/80 80+80	100/60 125/80 80+80	100/60 125/80 80+80

TECHNICAL SPECIFICATIONS OF STANDARD BOILERS

Technical specifications	um	Nibir	Nibir	Nibir	Nibir	Nibir	Nibir
Model	-	CTFS 9	CTFS 11	CTFS 13	CTFS 15	CTFS 18	CTFS 24
Type	-	B22-C12-C12X-C32-C42-C52-C62-C82	B22-C12-C12X-C32-C42-C52-C62-C82	B22-C12-C12X-C32-C42-C52-C62-C82	B22-C12-C12X-C32-C42-C52-C62-C82	B22-C12-C12X-C32-C42-C52-C62-C82	B22-C12-C12X-C32-C42-C52-C62-C82
Nominal heat input (Qn)	kW	10,4	12,3	14,2	16,4	20,0	25,5
Reduced heat input (Qr)	kW	7,0	7,0	7,0	7,0	7,0	11,5
Nominal heat output (80-60°C) (Pn)	kW	9,3	11,1	13,0	15,1	18,6	23,3
Reduced heat output (80-60°C) (Pr)	kW	6,0	6,0	6,0	6,0	6,0	9,9
Useful efficiency at nominal input (80-60°C)	%	89,2	90,2	91,2	91,8	93,2	91,2
Useful efficiency at 30% (30°C return)	%	86,2	86,9	87,6	87,7	88,2	87,4
Heating circuit working pressure (min-max)	bar	0,5-3,0	0,5-3,0	0,5-3,0	0,5-3,0	0,5-3,0	0,5-3,0
CH temperature setting range	°C	35-78	35-78	35-78	35-78	35-78	35-78
CH maximum working temperature	°C	83	83	83	83	83	83
Heating expansion vessel capacity	l	6	6	6	6	6	6
DHW nominal heat input	kW	20,0	20,0	20,0	20,0	20,0	25,5
DHW minimum heat input	kW	18,6	18,6	18,6	18,6	18,6	23,1
DHW nominal heat output (ΔT 30°C)	kW	7,0	7,0	7,0	7,0	7,0	11,5
DHW minimum heat output (ΔT 30°C)	kW	6,0	6,0	6,0	6,0	6,0	9,9
DHW circuit working pressure (min-max)	bar	0,5-6,0	0,5-6,0	0,5-6,0	0,5-6,0	0,5-6,0	0,5-6,0
Specific DHW flow ΔT=30K	l/min	9,5	9,5	9,5	9,5	9,5	11,7
DHW temperature range	°C	35-57	35-57	35-57	35-57	35-57	35-57
DHW maximum working temperature	°C	62	62	62	62	62	62
NOx emission class	-	3	3	3	3	3	3
Casing heat loss with burner on at nominal heat input	%	1,59	1,46	1,46	1,37	1,55	1,96
Casing heat loss with burner off	%	0,31	0,25	0,22	0,19	0,16	0,11
Chimney heat loss with burner on at nominal heat input	%	9,05	7,90	7,32	6,83	5,25	6,84
Air-flue ΔT at nominal heat input	°C	101,3	101,3	101,3	101,3	101,3	125,5
Flue gas flow at nominal heat input	g/s	11,5	11,5	11,5	11,5	11,5	15,4
CO2 at nominal heat input of heating (Natural gas)	%	7,0	7,0	7,0	7,0	7,0	6,7
CO2 at nominal heat input of heating (Propane)	%	7,6	7,6	7,6	7,6	7,6	7,9
CO2 at nominal heat input of heating (Butane gas)	%	8,1	8,1	8,1	8,1	8,1	7,9
Power supply voltage/frequency	V/Hz	230/50	230/50	230/50	230/50	230/50	230/50
Maximum power consumption	W	102	102	102	102	102	102
Circulation pump power input	W	66	66	66	66	66	66
Electric protection rating	IP	X4D	X4D	X4D	X4D	X4D	X4D
Air intake/flue gas vent pipe diameter	mm	100/60 125/80 80+80	100/60 125/80 80+80	100/60 125/80 80+80	100/60 125/80 80+80	100/60 125/80 80+80	100/60 125/80 80+80